CHAPTER 12

ELECTRIC SERVICE RULES – OPTIONAL STAND BY SYSTEMS

1200. SCOPE.

This chapter applies to Customer-owned portable (temporary) or permanently mounted stand-by generators that are not to be operated in parallel with Alliant Energy's electric distribution system. (*NEC* 702)

Consult Alliant Energy for any other installations.

1201. SAFETY

A. The Customer shall consult Alliant Energy before connecting any generating equipment to any Customer circuit that is or can be supplied from Alliant Energy's electric distribution system.

B. Transfer switches may only be located before the main service disconnects where the available fault current is less than 10,000 amps.

C. The Customer's transfer device shall be constructed and connected as to positively prevent any possibility of power from the Customer's emergency source feeding back into Alliant Energy's distribution system

1202. TRANSFER SYSTEM REQUIREMENTS

A. The Customer may supply all or a portion of his electrical load from his standby generator.

B. The Customer shall install a transfer switch or contactor to transfer all ungrounded conductors load to either the generator or normal supply.

C. Alliant Energy shall approve automatic transfer systems.

D. All transfer devices shall:

a. Prevent connecting the generator to the load until after the load is disconnected from Alliant Energy's system.
   Exception: Closed transition type transfer switches that interconnect the emergency generators and the normal supply for a maximum of 500 milliseconds (1/2 second).

b. Positively prevent accidental connection of the generator to Alliant Energy's system at any time.

c. Closed transition type transfer switches shall have a lockable, visually open break in the circuit between the normal supply and the transfer switch.

NOTES:

Closed transition = Close before Break, no disruption to load.
Open transition = Open before Break, requires disruption to load.

1203. TRANSFER SWITCH OPTIONS.

A. Permitted:
1. Manual or automatic double throw switches
2. Double throw relays
3. Mechanically interlocked switches
4. Mechanically interlocked fuse block

B. Permitted in dry, corrosion free, dust free environments, such as indoors:
1. Breakers with factory designed mechanical interlocks

C. Not permitted:
1. Key interlocked switches
2. Key interlocked breakers
3. Switches that plug into the meter-socket.

1204. TRANSFER SWITCHES

A. Pole-Top Transfer Switches shall be listed in the ESE Book (NEC 547.2 Site-Isolating Device)
1. ESE 228 – 250 Volt
2. ESE 229 – 600 Volt

B. Grade-Level Transfer Switches.
1. Grade-Level transfer switches, with integral meter-sockets, will be listed in the ESE Book, ESE 230.
2. Grade-Level transfer switches, without integral meter-sockets, do not require Alliant Energy approval and will not be listed in the ESE Book, but their installation must meet the following requirements:
   a. Meet the requirements of NEC.
   b. Be listed by an approved testing laboratory, e.g., (U.L.).
   c. Meet ESR 1203 requirements.

1205. CONNECTION AND NEUTRAL SWITCHING REQUIREMENTS.

Figure	TRANSFER SWITCH LOCATION	SEPERATELY DERIVED SYSTEM STANDBY GENERATORS * (includes portable generators)	NON-SEPERATELY DERIVED SYSTEM STANDBY GENERATORS
		The generator's neutral is bonded to the generator's equipment grounding conductor at the generator and a grounding electrode system is required at the generator.	The generator's neutral is NOT bonded to the generator's equipment grounding conductor at the generator and a grounding electrode system is NOT required at the generator.
1	Transfer Switch is installed on a feeder with separate equipment grounding and neutral conductors or on a branch circuit.	1. Connect the generator's equipment grounding conductor to the feeder's/branch circuit's equipment grounding conductor and the generator's neutral conductor to the feeder's/branch circuit's neutral conductor. 2. Neutral must be switched.	1. Connect the generator's equipment grounding conductor to the feeder's/branch circuit's equipment grounding conductor and the generators neutral conductor to the feeder's/branch circuit's neutral conductor. 2. Do not switch the neutral.
2	Transfer Switch on the source side of a single family residential service entrance rated 200 amps or less (available fault current of 10,000 amps or less). *NEC* 547 – Agricultural Building pole top site-isolating device (transfer switch)	1. Connect the generator's equipment grounding conductor and neutral conductor to systems grounded neutral conductor. 2. Do not switch the neutral.	
3	Service entrance rated transfer switch.	1. Connect the generator's equipment grounding conductor and neutral conductor to the service entrance's grounded neutral bus. 2. Do not switch the neutral.	
4	Transfer Switch is located on a feeder with a grounded neutral (Allowed prior to 2008 *NEC*).	1. Connect the generator's equipment grounding conductor and neutral conductor to systems grounded neutral conductor. 2. Do not switch the neutral.	

*A separately derived generator is a generator that can be operated without being interconnected to a service entrance panel by a transfer switch. A typical application is to provide power to portable equipment. A non-separately derived generator can NOT provide power directly to portable equipment.
Switching criteria: Do not switch the equipment grounding conductor or the grounded neutral conductor. Do not re-ground the neutral after the grounded neutral conductor has been separated into a neutral conductor and an equipment grounding conductor..

TRANSFER SWITCH IS INSTALLED ON A FEEDER WITH SEPARATE EQUIPMENT GROUNDING AND NEUTRAL CONCUCTORS OR ON A BRANCH CIRCUIT

SEPARATELY DERIVED SYSTEM **NON-SEPARATELY DERIVED SYSTEM**

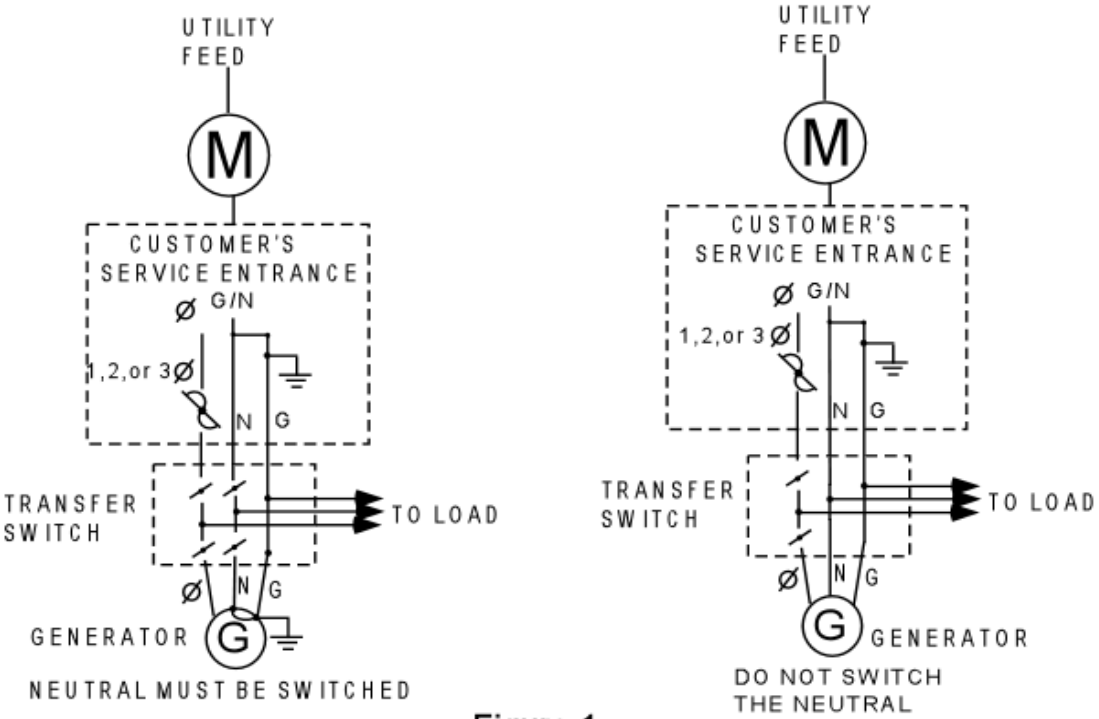

Figure 1

TRANSFER SWITCH ON THE SOURCE SIDE OF A SINGLE FAMILY RESIDENCE'S SERVICE ENTRANCE
OR
NEC 547 AGRICULTURAL BUILDING, POLE TOP SITE ISOLATED DEVICE

SEPARATELY DERIVED SYSTEM **NON-SEPARATELY DERIVED SYSTEM**

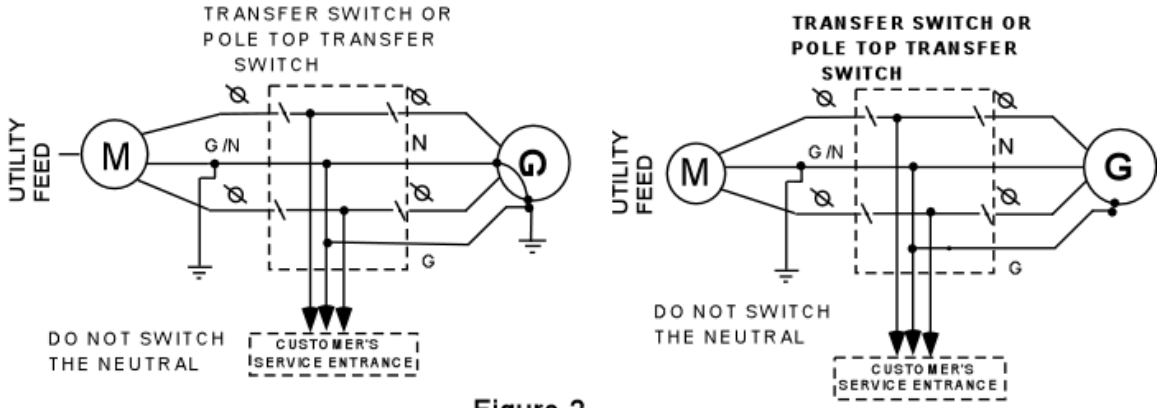

Figure 2

SERVICE ENTRANCE RATED TRANSFER SWITCH

SEPARATELY DERIVED SYSTEM

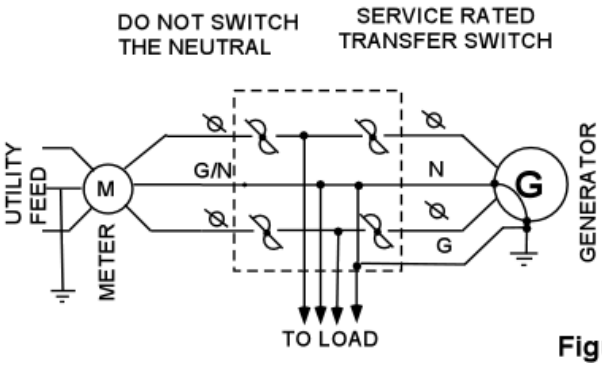

NON-SEPARATELY DERIVED SYSTEM

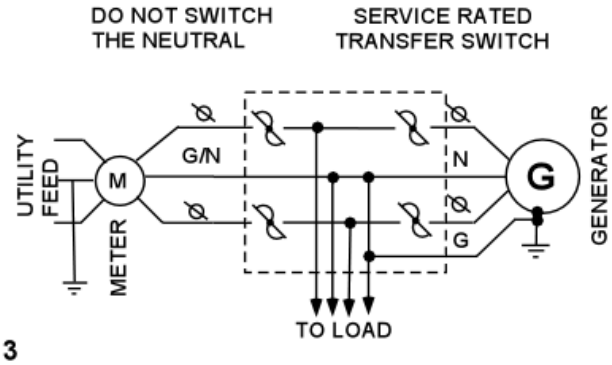

Figure 3

TRANSFER SWITCH IS LOCATED ON A FEEDER WITH A GROUNDED NEUTRAL (PRIOR TO NEC 2008)

SEPARATELY DERIVED SYSTEM

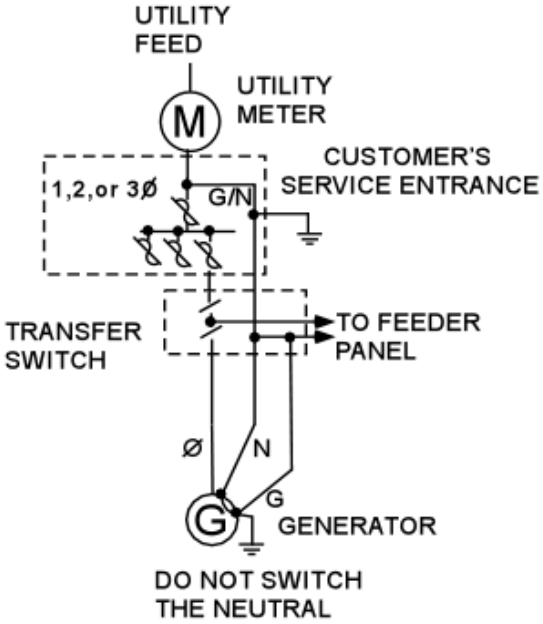

NON-SEPARATELY DERIVED SYSTEM

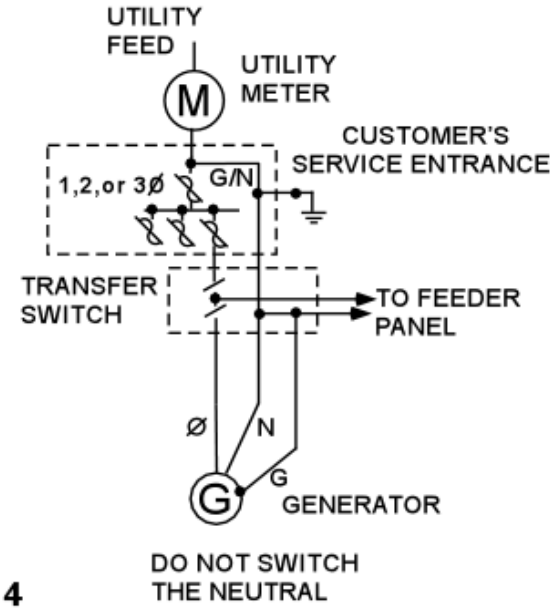

Figure 4

1206. STAND BY GENERATOR INSTALLATION (GENERATOR SUPPLIES ALL OF CUSTOMER'S LOAD AT TWO DIFFERENT LOCATIONS) SINGLE-PHASE, 120/240 VOLTS, UP TO 300 AMPS.

The Customer shall install, own and maintain the entire installation except for Alliant Energy's meters.

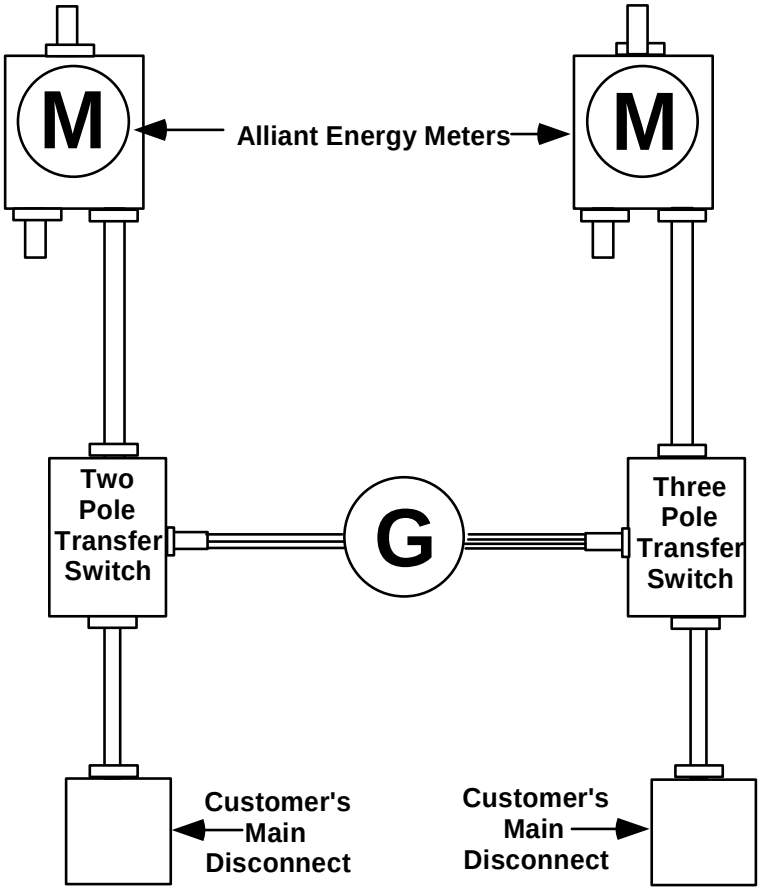

NOTES:

1. The generator service disconnect and overcurrent protection may be an integral part of the generator.
2. Transfer switches shall be listed by an approved testing agency.
3. One of the transfer switches shall be a two-pole device. All other transfer switches shall be three-pole devices to open the neutral between the services.