CHAPTER 5

ELECTRIC SERVICE RULES –DISTRIBUTION GENERATION

△ **500. SCOPE.**

This chapter applies to Customer-owned portable (temporary) or permanently mounted generation. The Chapter is divided in two parts:
Part A which addresses optional standby systems; these are not operated in parallel with AE electric distribution system.
Part B which addresses distributed generation (DG) systems; these do operate in parallel with Alliant Energy's electric distribution system.
Consult Alliant Energy for these and all other generation installations.

DISTRIBUTION GENERATION - OPTION STANDBY (Part A)

501. SAFETY

A. The Customer shall consult Alliant Energy before connecting any generating equipment to any Customer circuit that is or can be supplied from Alliant Energy's electric distribution system.

B. Transfer switches may only be located before the main service disconnects where the available fault current is less than 10,000 amps.

C. The Customer's transfer device shall be constructed and connected as to positively prevent any possibility of power from the Customer's emergency source feeding back into Alliant Energy's distribution system

502. TRANSFER SYSTEM REQUIREMENTS

a. The Customer may supply all or a portion of his electrical load from his standby generator.

b. The Customer shall install a transfer switch or contactor to transfer all ungrounded conductors load to either the generator or normal supply.

c. Alliant Energy shall approve automatic transfer systems.

d. All transfer devices shall:
   a. Prevent connecting the generator to the load until after the load is disconnected from Alliant Energy's system.

Exception: Closed transition type transfer switches that interconnect the emergency generators and the normal supply for a maximum of 500 milliseconds (1/2 second).

b. Positively prevent accidental connection of the generator to Alliant Energy's system at any time.
c. Closed transition type transfer switches shall have a lockable, visually open break in the circuit between the normal supply and the transfer switch.

NOTES:

Closed transition = Close before Break, no disruption to load.
Open transition = Open before Break, requires disruption to load.

503. TRANSFER SWITCH OPTIONS.

a. Permitted:
   1. Manual or automatic double throw switches
   2. Double throw relays
   3. Mechanically interlocked switches
   4. Mechanically interlocked fuse block
b. Permitted in dry, corrosion free, dust free environments, such as indoors:
   1. Breakers with factory designed mechanical interlocks
c. Not permitted:
   1. Key interlocked switches
   2. Key interlocked breakers
   3. Switches that plug into the meter-socket.

504. TRANSFER SWITCHES

a. Pole-Top Transfer Switches shall be listed in the ESE Book (NEC 547.2 Site-Isolating Device)
   1. ESE 228 – 250 Volt
   2. ESE 229 – 600 Volt

b. Grade-Level Transfer Switches.
   1. Grade-Level transfer switches, with integral meter-sockets, will be listed in the ESE Book, ESE 230.
   2. Grade-Level transfer switches, without integral meter-sockets, do not require Alliant Energy approval and will not be listed in the ESE Book, but their installation must meet the following requirements:
      a. Meet the requirements of NEC.
      b. Be listed by an approved testing laboratory, e.g., (U.L.)
      c. Meet ESR 503 requirements.

505 . CONNECTION AND NEUTRAL SWITCHING REQUIREMENTS.

Figure	TRANSFER SWITCH LOCATION	SEPERATELY DERIVED SYSTEM STANDBY GENERATORS * (includes portable generators)	NON-SEPERATELY DERIVED SYSTEM STANDBY GENERATORS
		The generator's neutral is bonded to the generator's equipment grounding conductor at the generator and a grounding electrode system is required at the generator.	The generator's neutral is NOT bonded to the generator's equipment grounding conductor at the generator and a grounding electrode system is NOT required at the generator.
1	Transfer Switch is installed on a feeder with separate equipment grounding and neutral conductors or on a branch circuit.	1. Connect the generator's equipment grounding conductor to the feeder's/branch circuit's equipment grounding conductor and the generator's neutral conductor to the feeder's/branch circuit's neutral conductor. 2. Neutral must be switched.	1. Connect the generator's equipment grounding conductor to the feeder's/branch circuit's equipment grounding conductor and the generators neutral conductor to the feeder's/branch circuit's neutral conductor. 2. Do not switch the neutral.
2	Transfer Switch on the source side of a single family residential service entrance rated 200 amps or less (available fault current of 10,000 amps or less). *NEC* 547 – Agricultural Building pole top site-isolating device (transfer switch)	1. Connect the generator's equipment grounding conductor and neutral conductor to systems grounded neutral conductor. 2. Do not switch the neutral.	
3	Service entrance rated transfer switch.	1. Connect the generator's equipment grounding conductor and neutral conductor to the service entrance's grounded neutral bus. 2. Do not switch the neutral.	
4	Transfer Switch is located on a feeder with a grounded neutral (Allowed prior to 2008 *NEC*).	1. Connect the generator's equipment grounding conductor and neutral conductor to systems grounded neutral conductor. 2. Do not switch the neutral.	

*A separately derived generator is a generator that can be operated without being interconnected to a service entrance panel by a transfer switch. A typical application is to provide power to portable equipment. A non-separately derived generator can NOT provide power directly to portable equipment.
Switching criteria: Do not switch the equipment grounding conductor or the grounded neutral conductor. Do not re-ground the neutral after the grounded neutral conductor has been separated into a neutral conductor and an equipment grounding conductor..

TRANSFER SWITCH IS INSTALLED ON A FEEDER WITH SEPARATE EQUIPMENT GROUNDING AND NEUTRAL CONCUCTORS OR ON A BRANCH CIRCUIT

SEPARATELY DERIVED SYSTEM

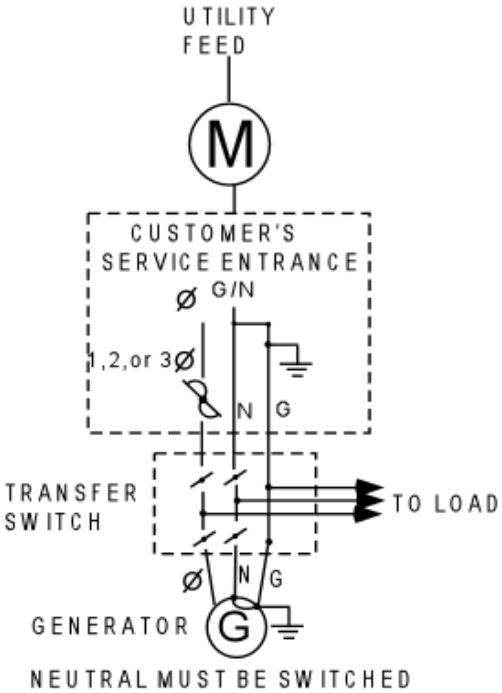

NON-SEPARATELY DERIVED SYSTEM

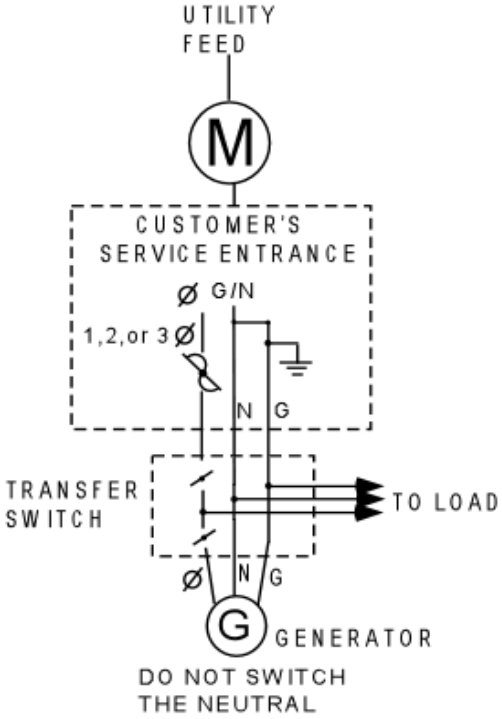

Figure 1

TRANSFER SWITCH ON THE SOURCE SIDE OF A SINGLE FAMILY RESIDENCE'S SERVICE ENTRANCE
OR
NEC 547 AGRICULTURAL BUILDING, POLE TOP SITE ISOLATED DEVICE

SEPARATELY DERIVED SYSTEM

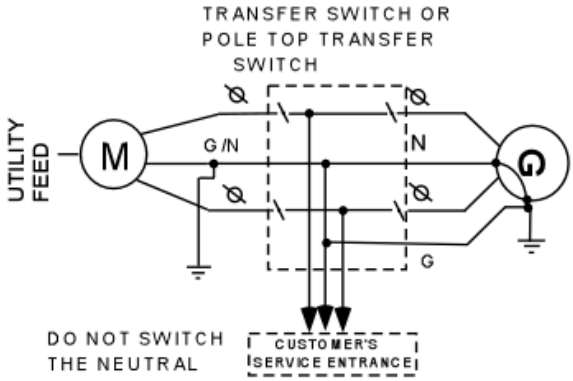

NON-SEPARATELY DERIVED SYSTEM

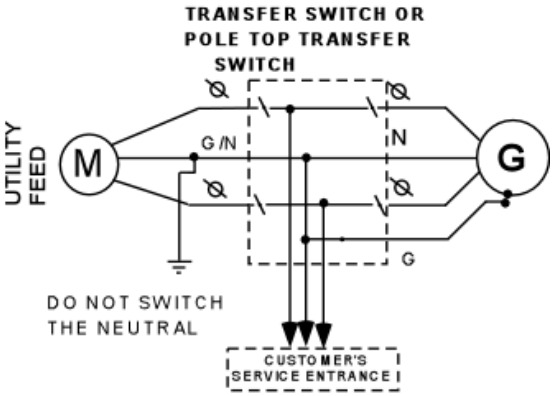

Figure 2

SERVICE ENTRANCE RATED TRANSFER SWITCH

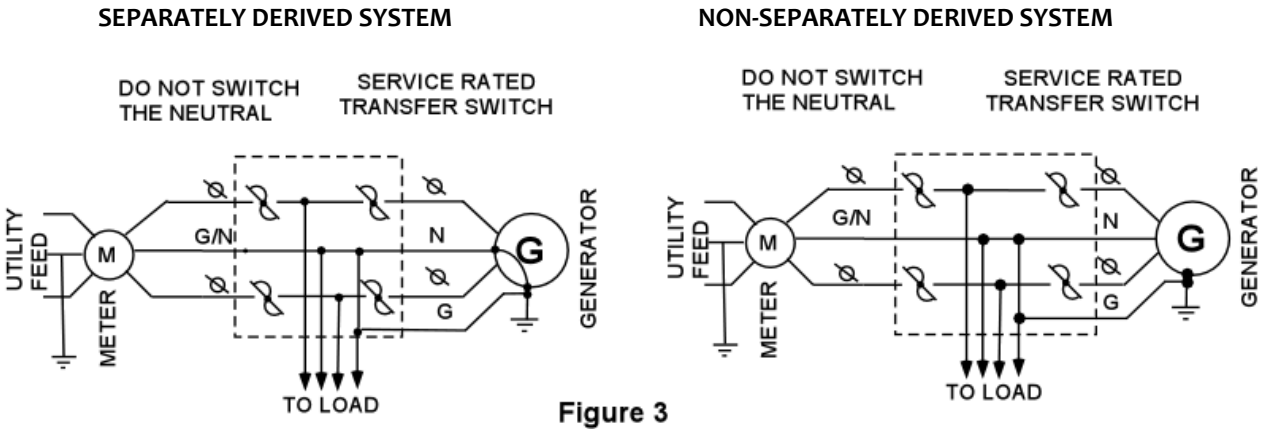

Figure 3

TRANSFER SWITCH IS LOCATED ON A FEEDER WITH A GROUNDED NEUTRAL (PRIOR TO NEC 2008)

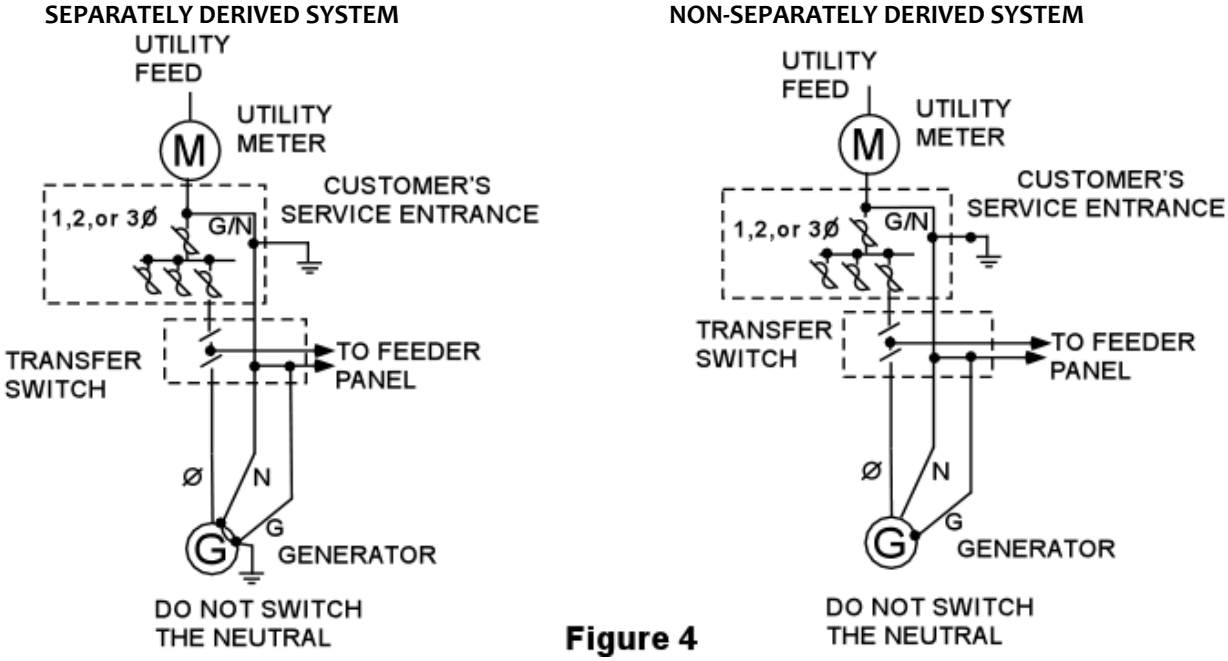

Figure 4

506. STANDBY GENERATOR INSTALLATION (GENERATOR SUPPLIES ALL OF CUSTOMER'S LOAD AT TWO DIFFERENT LOCATIONS) SINGLE-PHASE, 120/240 VOLTS, UP TO 300 AMPS.

The Customer shall install, own and maintain the entire installation except for Alliant Energy's meters.

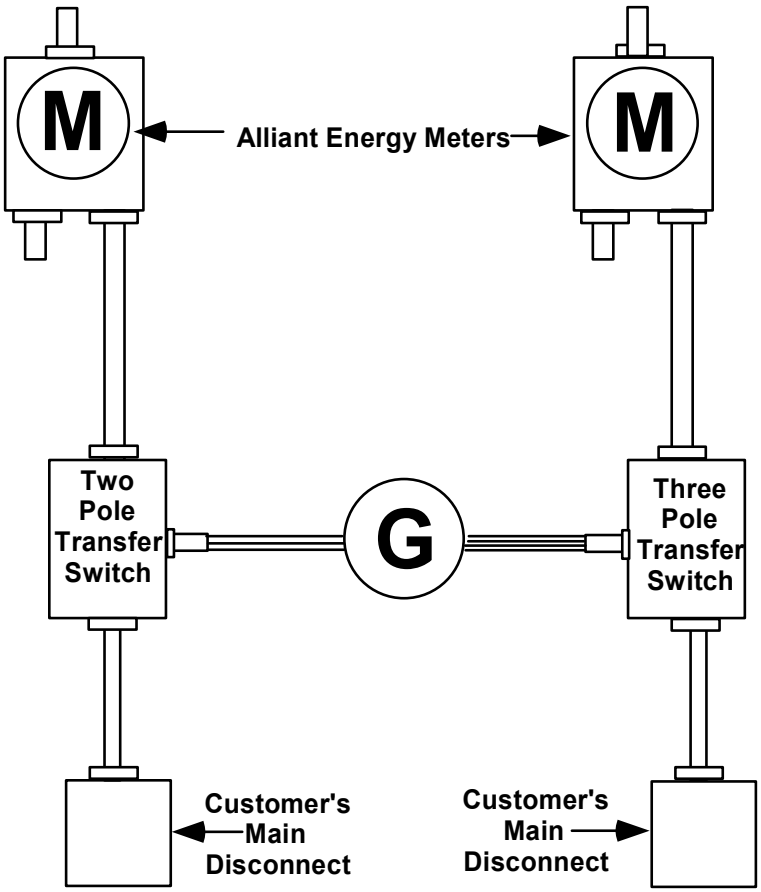

NOTES:

1. The generator service disconnect(s) and overcurrent protection may be an integral part of the generator.
2. Transfer switches shall be listed by an approved testing agency.
3. One of the transfer switches shall be a two-pole device. All other transfer switches shall be three-pole devices to open the neutral between the services.

DISTRIBUTION GENERATION - Distributed Generation (DG). (Part B)

△ **507. SCOPE**

This section of the chapter includes all Customer-owned generators connected in parallel and operating with the Company's electrical system within all territories served by the Company.

508. AVAILABILITY

Distributed Generation is available for single and three phase customers where a part or all of the electrical requirements of the Customer are supplied by the customer's generating facilities. Characteristics of the Company's electrical system vary throughout the territory, and not every size, voltage and "phase" generator can be connected at every location.

509. PERMMISION TO CONNECT

The Customer shall consult the Company prior to the installation of a parallel generator and supply the Company with the required electrical drawings and data for the proposed installation in all cases. Company permission is required for each installation and such permission granted shall not constitute a Company guarantee or imply Company liability for satisfactory operation of the Customer's generator. The Company may specify and require certain protective schemes based on the size, location, etc. of the generating unit proposed. Call **1-800-972-5325** or visit the Alliant Energy Web Site for more information (www.alliantenergy.com).

510. ELECTRIC RATE

The Customer's rate for purchasing electricity from the Company is the based on the available rates schedules and the size of the generating unit. Customer-generated electrical energy delivered to the Company's system will be purchased in accordance with the Company's applicable generation rates. Please contact the **Distributed Resources Hotline** at **1-800-972-5325** or visit the Alliant Energy Web Site for more information (www.alliantenergy.com).

511. METERING

A. The Company will furnish and install appropriate meters, (CT's & PT's, if required) to measure energy flow. Note that additional meter charges may apply.
B. The Customer shall furnish, install, own and maintain the necessary electric service entrance equipment, meter sockets, metering cabinets and related equipment that may be required for supporting or enclosing the Company's metering equipment.

512. COMPANY DISTRIBUTION SYSTEM

Modifications and additions to Alliant Energy's electrical distribution system to accommodate distributed generation systems are treated as standby / duplicate facilities according to Alliant Energy's extension rules.

513. TECHNICAL INFORMATION

IOWA

- IPL Technical Guidelines and Requirements for Interconnection of Parallel Operated Generation Connected to the Interstate Power and Light Electric Distribution System
- The Iowa Administrative Code Chapter 45

MINNESOTA

- IPL Technical Guidelines and Requirements for Interconnection of Parallel Operated Generation Connected to the Interstate Power and Light Electric Distribution System
- Minnesota Administrative Rules Chapter 7835

WISCONSIN

- Wisconsin Distributed Generation Interconnection Guidelines
- PSC 119 – Rules For Interconnecting Distributed Generation Facilities
- Standard Distributed Generation Application Form (Generation 20 kW or Less)
- Standard Distributed Generation Application Form (Generation 20 kW to 15 MW)
- Distributed Generation Interconnect Agreement (20 kW or less)
- Distributed Generation Interconnect Agreement (20 kW to 15 MW)

514.CONTRACT

The Company will require an interconnect agreement specifying technical and operating aspects of distributed generation. Please contact **Distributed Resources Hotline** at **1-800-972-5325** or visit the Alliant Energy Web Site for more information. (www.alliantenergy.com)

515. INSURANCE - (See Distributed Generation Contract Requirements).

516. GENERATOR OPERATION (See Section 513)

517. GENERATOR MAINTENANCE (See Section 513)

518. GENERATOR PROTECTION (See Section 513)

519. ISOLATION

The Customer shall provide an isolating device to automatically disconnect the Customer's generator from the Company's electrical system in the event of a Company power outage. The isolating device shall not re-close until after power is restored to the Company's electrical system. The isolating device may be a circuit breaker, relay contacts, switch or equivalent equipment. The above isolating device shall be activated by reliable sensors which detect loss of utility system AC voltage, low or high frequency, generator overload or other suitable input from the utility's distribution system.

Static Inverters and Converters may have a UL 1741 listing or accepted Nationally Recognized Testing Laboratories (NRTL) with an Output Type of "Utility Interactive" or an Output Code of "UI" (See Technical Guidelines and Distributed Generation Contract Requirements).

520. SYNCHRONIZING - (See Section 1406)

521. TRANSFORMATION

In the event the voltage or frequency supplied by the Customer generator is different than the Alliant Energy's available standard frequency and / or voltage (refer to Chapter 1, Section 108), the Customer shall install, own and maintain all transformers and associated equipment necessary for the voltage transformation.

522. POWER FACTOR AND CAPACITORS

Some types of generators are incapable of supplying the Customer's lagging power factor loads such as motors, etc. The Customer is responsible for supplying any power factor correction (capacitors) which may be required during the generator operation.

The power factor of a generator shall not be less than required. The Customer is responsible for providing power factor correction for generation below the requirement value (See Technical Guidelines and Distributed Generation Contract Requirements).

523. OPTIONAL STANDBY GENERATOR USED WITH PARALLEL GENERATION

Where a Customer operates both a parallel generator and an optional standby generator, the standby generator must be installed in strict accordance with the connection and transfer switch requirements of Chapter 5 part A.

524. DRAWINGS

Sample diagrams and metering drawings are shown in Sections 525 thru 532. Consult Alliant Energy for larger installations or drawings not shown.

525. NET-METERED SELF-CONTAINED DISTRIBUTED GENERATION 300AMP MAX

Utility furnishes, installs and maintains

1. Underground Service Cable
2. Meter (Outside)

Customer furnishes, installs and maintains

3. Customer service entrance panel (Outside or Inside)
4. Rigid Conduit
5. Approved Meter Socket (Outside)
6. Concrete Sleeve (Optional) – Required where conduit passes through concrete
7. Conduit Expansion Joint - Required where horizontal conduit runs are installed
8. Conduit Insulating Bushing
9. Conduit Straps
10. Grounding in accordance with the code (Refer to pages 156-159)

NOTES:

1. The applicant shall label the interconnection disconnect switch "Interconnection Disconnect Switch" by means of a permanently attached sign with clearly visible and permanent letters. The applicant shall provide and post its procedure for disconnecting the DG facility next to the switch.
2. A separate DG disconnect is not required if DG Service Entrance includes a disconnect switch with a visible break and can be locked open.
3. The DG disconnect and its location shall conform to technical guidelines and state requirements. Consult with Alliant Energy for details and specifications.
4. Communication intersystem bonding is not allowed on or in any metering device.
5. Intersystem bonding may only be done at the ground rod(s), on the Grounding Electrode Conductor or ground bus in customers main disconnect.

△ **525. NET-METERED SELF-CONTAINED DISTRIBUTED GENERATION – CONTINUED**

100 – 300AMP 1 PH 120/240

100 – 300 AMP 1 PH 120/208

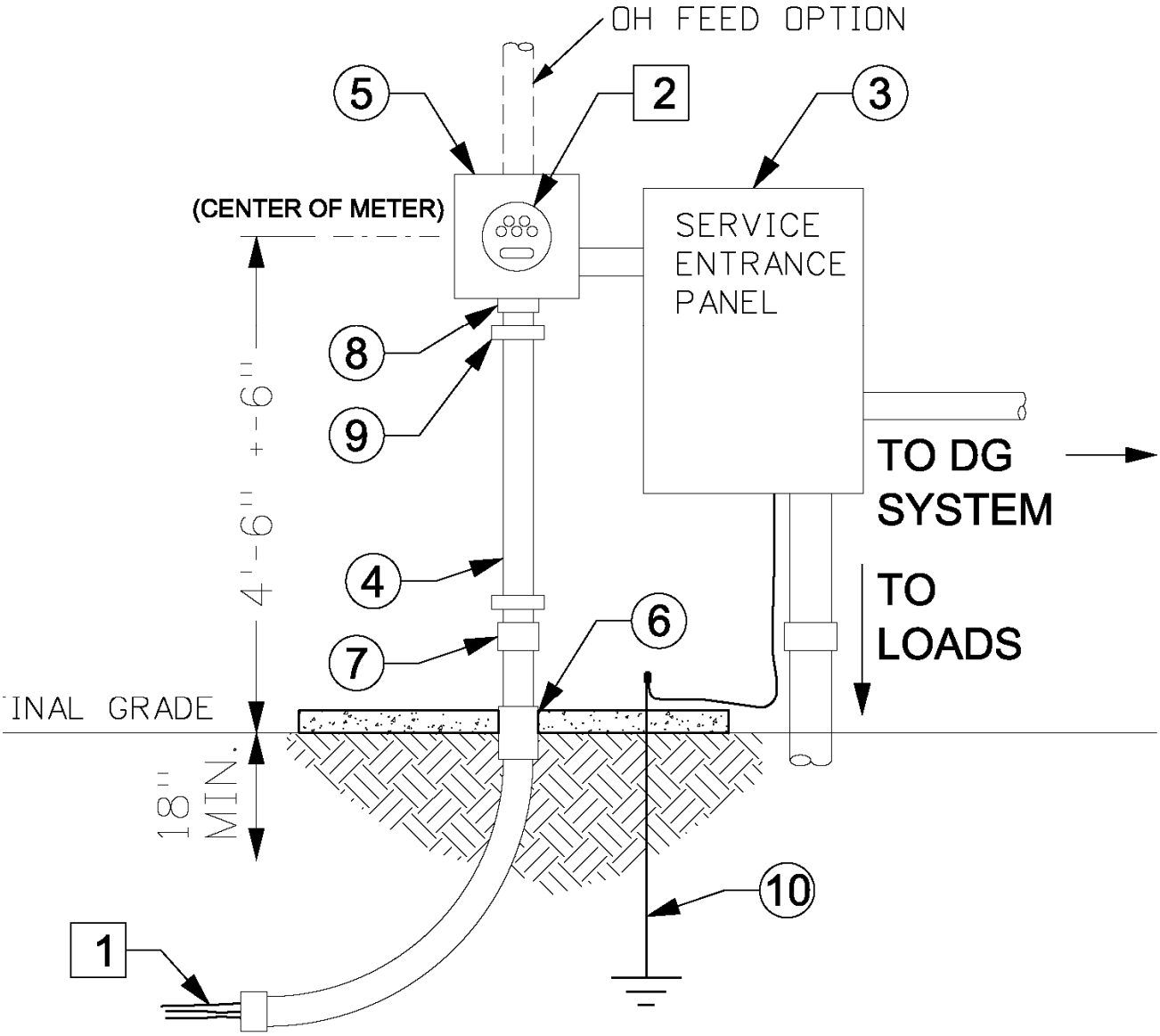

526. NET- METERED DISTRIBUTED GENERATION FIELD BUILT STRUCTURE

100 - 300 AMP – 1 PH 120/240 VOLT

100 - 300 AMP – 3PH 120/208 VOLT

☐ **Utility furnishes, installs & maintains**

1. Service Drop
2. Meter

○ **Customer furnishes, installs, & maintains**

3. Field Built Structure (see 615)
4. Approved Meter Socket
5. Treated 35' Class 5 min Pole
6. Grounding in accordance with the code (Refer to pages 156-159)
7. Service Entrance
8. Overhead Service Conduit with weather head
9. Feeder Panels – as needed
10. Expansion Sleeves – as needed
12. Conduit Expansion Joint

NOTES:

1. The applicant shall label the interconnection disconnect switch "Interconnection Disconnect Switch" by means of a permanently attached sign with clearly visible and permanent letters. The applicant shall provide and post its procedure for disconnecting the DG facility next to the switch.

2. A separate DG disconnect is not required if DG Service Entrance includes a disconnect switch with a visible break and can be locked open.

3. The DG disconnect and its location shall conform to technical guidelines and state requirements. Consult with Alliant Energy for details and specifications.

4. Communication intersystem bonding is not allowed on or in any metering device.

5. Intersystem bonding may only be done at the ground rod(s), on the Grounding Electrode Conductor or ground bus in customers main disconnect.

△ **526. NET- METERED DISTRIBUTED GENERATION FIELD BUILT STRUCTURE – CONTINUED.**

100 - 300 AMP – 1 PH 120/240

100 - 300 AMP – 3PH 120/208

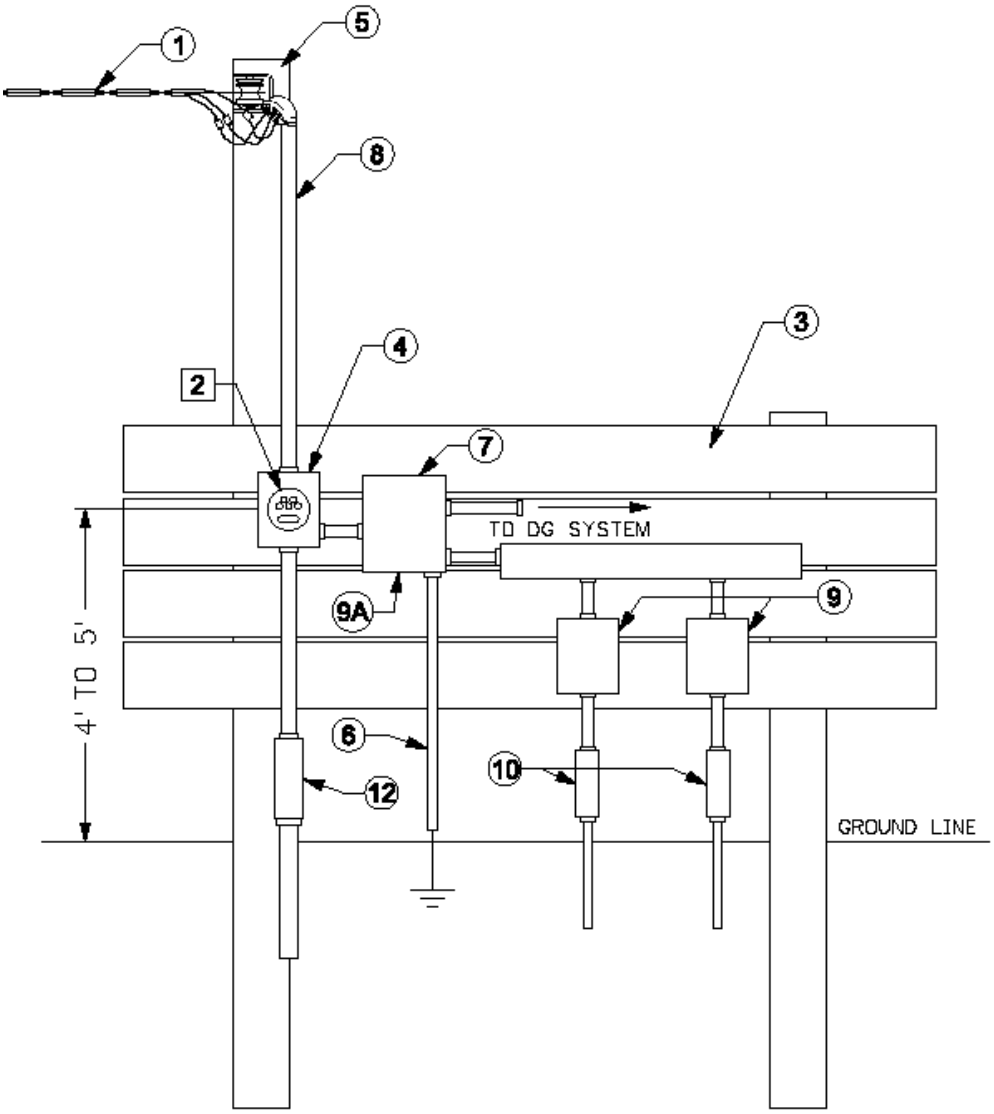

527. DUAL METERED FARM YARD-POLE DISTRIBUTED GENERATION
100 - 300 AMP 1 PH 120/240
100 – 300 AMP 3 PH 120/208

☐ **Utility furnishes, installs & maintains**

1. Service Drop
2. Service Connectors
3. Meters

○ **Customer furnishes, installs, & maintains**

4. Pole - Treated 35' Class 5 min.
5. Down Guy, anchor, & Guy Guard
6. Service Entrance
7. Overhead Service Conduit
8. Weather head
9. Approved Duplex Meter Socket
10. Grounding in accordance with the code (Refer to pages 156-159)
11. Feeder Conduit
12. Feeder Conductors (Customers)
13. Distributed Generation Disconnect (See Note 3 Below)

NOTES:

1. Customer shall provide 36 inch leads at the weather head.
2. If large equipment is to be driven under the service drop, see NESC 232.1. Drop shall be a minimum of 18 feet above ground at the lowest point.
3. The applicant shall label the interconnection disconnect switch "Interconnection Disconnect Switch" by means of a permanently attached sign with clearly visible and permanent letters. The applicant shall provide and post its procedure for disconnecting the DG facility next to the switch.
4. A separate DG disconnect is not required if DG Service Entrance includes a disconnect switch with a visible break and can be locked open.
5. The DG disconnect and its location shall conform to technical guidelines and state requirements. Consult with Alliant Energy for details and specifications.
6. Communication intersystem bonding is not allowed on or in any metering device.
7. Intersystem bonding may only be done at the ground rod(s), on the Grounding Electrode Conductor or ground bus in customers main disconnect.

527. DUAL METERED FARM YARD-POLE DISTRIBUTED GENERATION – CONTINUED

100 - 300 AMP 1 PH 120/240 VOLT
100 – 300 AMP 3PH 120/208 VOLT

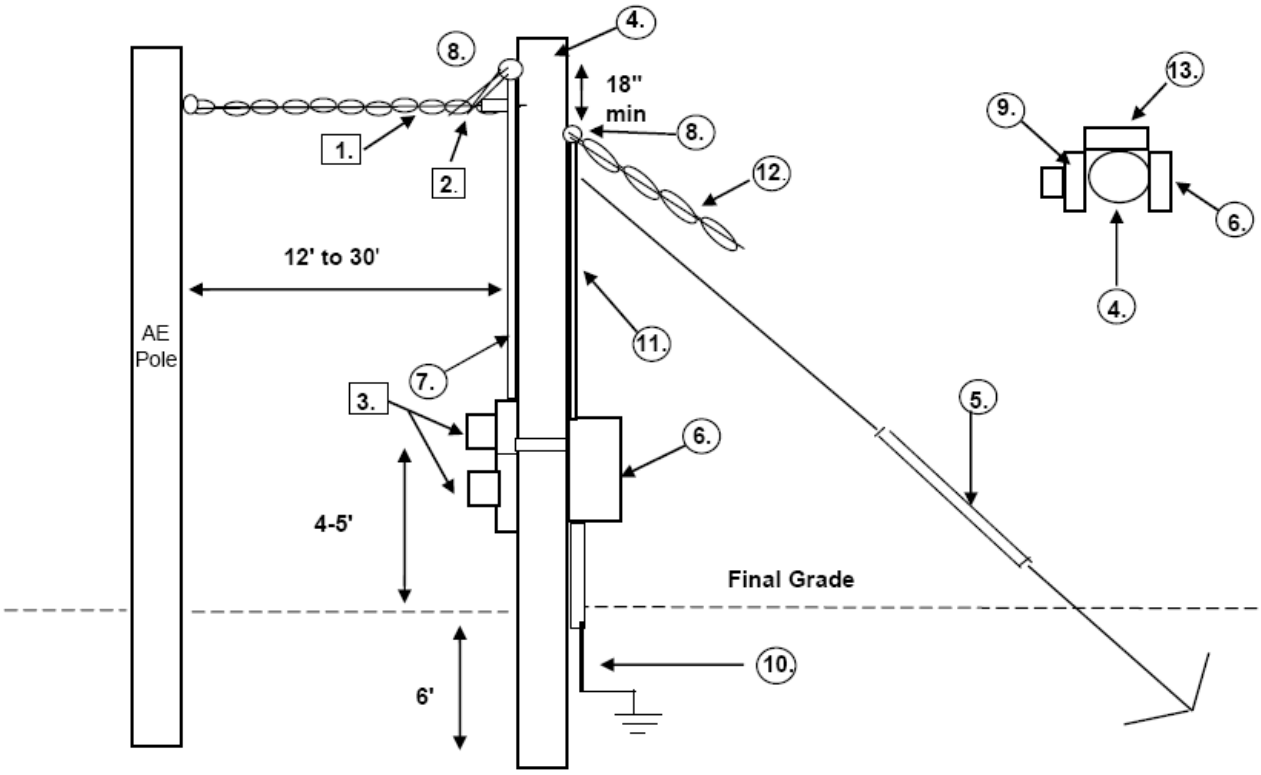

528. NET METERED FARM YARD-POLE DISTRIBUTED GENERATION
100 - 300 AMP 1 PH 120/240
100 – 300 AMP 3 PH 120/208

☐ **Utility furnishes, installs & maintains**

1. Service Drop
2. Service Connectors
3. Meter

○ **Customer furnishes, installs, & maintains**

4. Pole - Treated 35' Class 5 min.
5. Down Guy, anchor, & Guy Guard
6. Service Entrance
7. Overhead Service Conduit
8. Weather head
9. Approved Meter Socket
10. Grounding in accordance with the code (Refer to page 156-159)
11. Feeder Conduit
12. Feeder Conductors (Customers)
13. Distributed Generation Disconnect (See Note 3 Below)

NOTES:

1. The applicant shall label the interconnection disconnect switch "Interconnection Disconnect Switch" by means of a permanently attached sign with clearly visible and permanent letters. The applicant shall provide and post its procedure for disconnecting the DG facility next to the switch.
2. A separate DG disconnect is not required if DG Service Entrance includes a disconnect switch with a visible break and can be locked open.
3. The DG disconnect and its location shall conform to technical guidelines and state requirements. Consult with Alliant Energy for details and specifications.
4. Communication intersystem bonding is not allowed on or in any metering device.
5. Intersystem bonding may only be done at the ground rod(s), on the Grounding Electrode Conductor or ground bus in customers main disconnect.

△ **528. NET METERED FARM YARD-POLE DISTRIBUTED GENERATION – CONTINUED**
100 - 300 AMPS 1 PH 120/240
100 – 300 AMPS 3 PH 120/208

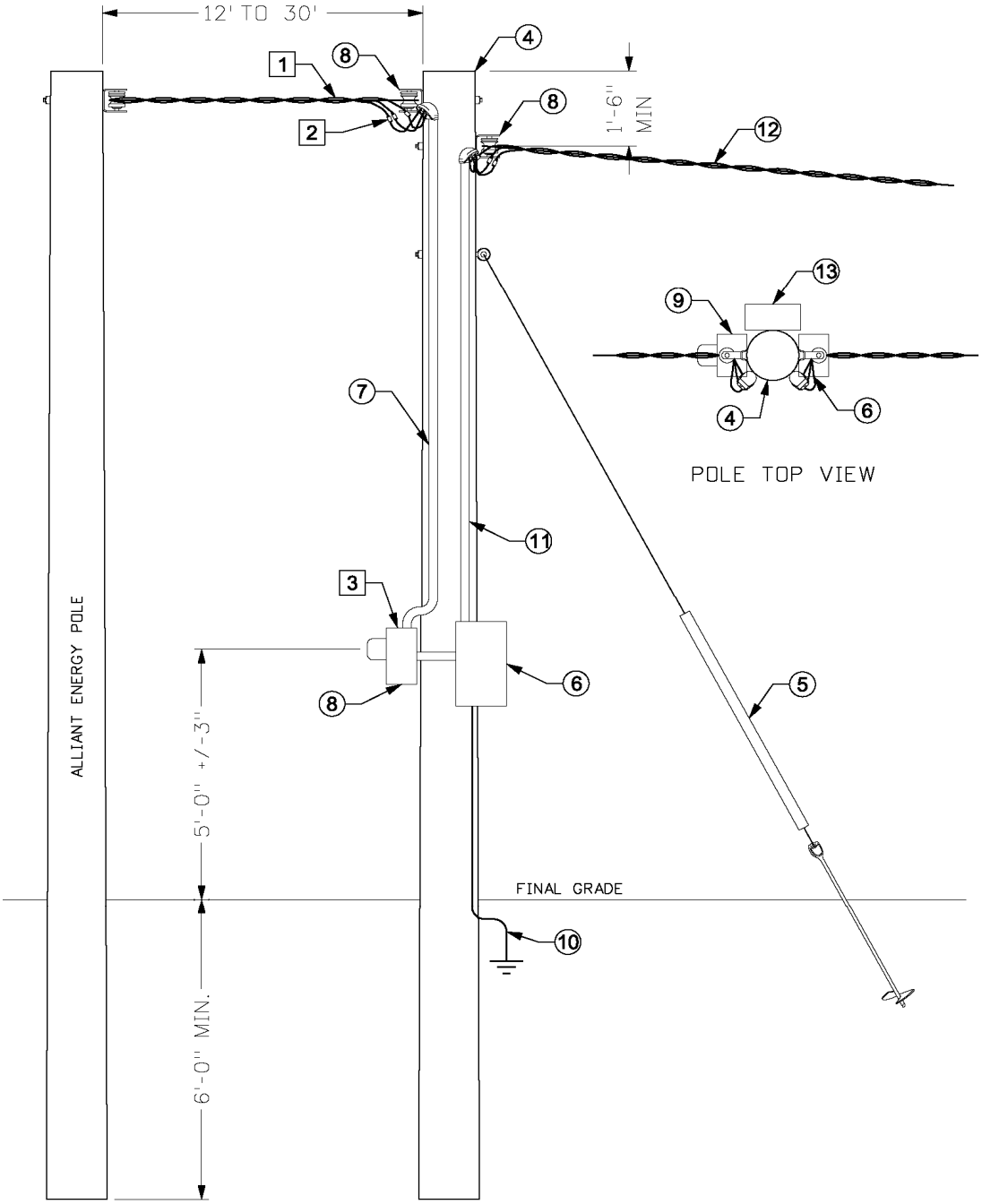

529. GENERAL SERVICE INSTRUMENT METERED DISTRIBUTED GENERATION WITH SELF- CONTAINED DISTRIBUTED GENERATION

301 - 800 AMP 1 PH 120/240
301 – 800 AMP 3 PH 120/208
301 – 800 AMP 3 PH 277/480

☐ **Utility furnishes, installs & maintains**

1. Meter

○ **Customer furnishes, installs, & maintains**

2. Approved Meter Socket
3. Approved General Service CT Cabinet
4. Junction Box
5. Approved DG Meter Socket
6. Grounding in accordance with the code (Refer to page 156-159)
7. Distributed Generation Service Entrance
8. Overhead Conduit
9. Optional Underground Feed
10. Expansion Joint

NOTES:

1. The applicant shall label the interconnection disconnect switch "Interconnection Disconnect Switch" by means of a permanently attached sign with clearly visible and permanent letters. The applicant shall provide and post its procedure for disconnecting the DG facility next to the switch.
2. A separate DG disconnect is not required if DG Service Entrance includes a disconnect switch with a visible break and can be locked open.
3. The DG disconnect and its location shall conform to technical guidelines and state requirements. Consult with Alliant Energy for details and specifications.
4. Communication intersystem bonding is not allowed on or in any metering device.
5. Intersystem bonding may only be done at the ground rod(s), on the Grounding Electrode Conductor or ground bus in customers main disconnect.

529. GENERAL SERVICE INSTRUMENT METERED DISTRIBUTED GENERATION WITH 0 TO 200 AMP SELF-CONTAINED DISTRIBUTED GENERATION – CONTINUED.

301 – 800 AMP 1 PH 120/240
301 – 800 AMP 3 PH 120/208

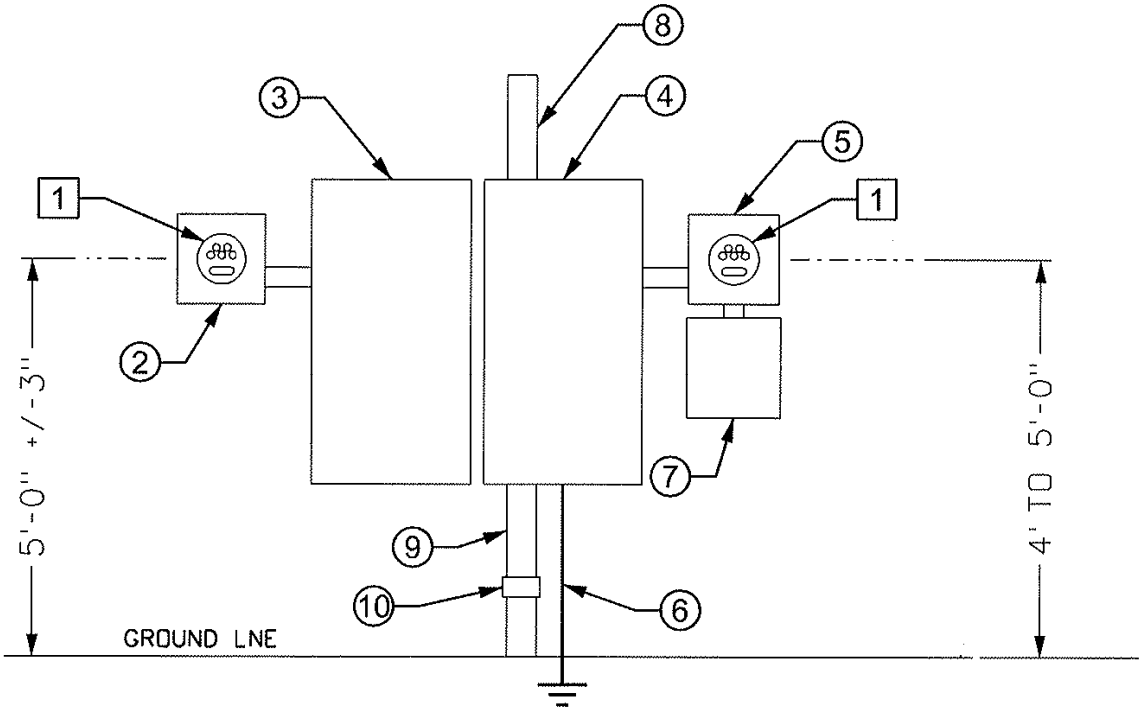

1422A.

530. GENERAL SERVICE INSTRUMENT METERED DISTRIBUTED GENERATION WITH 0 TO 300AMP SELF - CONTAINED DISTRIBUTED GENERATION 301 – 800 AMP 3 PH 277/480

☐ **Utility furnishes, installs & maintains**

1. Meter

○ **Customer furnishes, installs, & maintains**

2. Approved Meter Socket
3. Approved General Service CT Cabinet
4. Junction Box
5. Approved DG Meter Socket
6. Grounding in accordance with the code (Refer to page 156-159)
7. Distributed Generation Service Entrance
8. Overhead Conduit
9. Optional Underground Feed
10. Expansion Joint
11. Load Break Disconnect

NOTES:

1. The applicant shall label the interconnection disconnect switch "Interconnection Disconnect Switch" by means of a permanently attached sign with clearly visible and permanent letters. The applicant shall provide and post its procedure for disconnecting the DG facility next to the switch.
2. A separate DG disconnect is not required if DG Service Entrance includes a disconnect switch with a visible break and can be locked open.
3. The DG disconnect and its location shall conform to technical guidelines and state requirements. Consult with Alliant Energy for details and specifications.
4. Communication intersystem bonding is not allowed on or in any metering device.
5. Intersystem bonding may only be done at the ground rod(s), on the Grounding Electrode Conductor or ground bus in customers main disconnect.

530. GENERAL SERVICE INSTRUMENT METERED DISTRIBUTED GENERATION WITH 0 TO 300 AMP SELF- CONTAINED DISTRIBUTED GENERATION – CONTINUED.
301 to 800 AMP 3 PH 277/480 VOLT

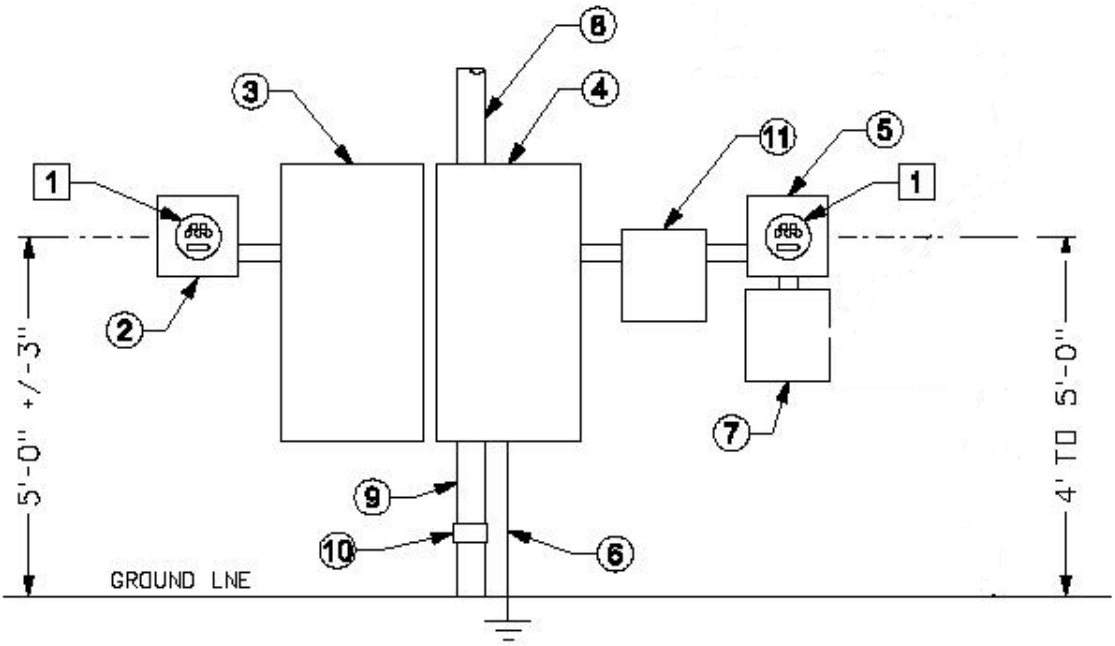

531. DUPLEX MANUFACTURED PEDESTAL DISTRIBUTED GENERATION
100 – 300 AMPS 1 PH 120/240
100 – 300 AMPS 3 PH 120/208

☐ **Utility furnishes, installs & maintains**

1. Meter
2. Underground Service Lateral

○ **Customer furnishes, installs, & maintains**

3. Approved Duplex Meter Enclosure
4. Service Entrance
5. Distributed Generation Disconnect
6. Grounding in accordance with the code (Refer to page 156-159)

NOTES:

1. The applicant shall label the interconnection disconnect switch "Interconnection Disconnect Switch" by means of a permanently attached sign with clearly visible and permanent letters. The applicant shall provide and post its procedure for disconnecting the DG facility next to the switch.
2. The applicant shall label the interconnection disconnect switch "Interconnection Disconnect Switch" by means of a permanently attached sign with clearly visible and permanent letters. The applicant shall provide and post its procedure for disconnecting the DG facility next to the switch.
3. A separate DG disconnect is not required if DG Service Entrance includes a disconnect switch with a visible break and can be locked open.
4. The DG disconnect and its location shall conform to technical guidelines and state requirements. Consult with Alliant Energy for details and specifications.
5. Communication intersystem bonding is not allowed on or in any metering device.
6. Intersystem bonding may only be done at the ground rod(s), on the Grounding Electrode Conductor or ground bus in customers main disconnect.

531. DUPLEX MANUFACTURED PEDESTAL DISTRIBUTED GENERATION – CONTINUED

100 – 300 AMPS 1 PH 120/240
100 – 300 AMPS 3 PH 120/208

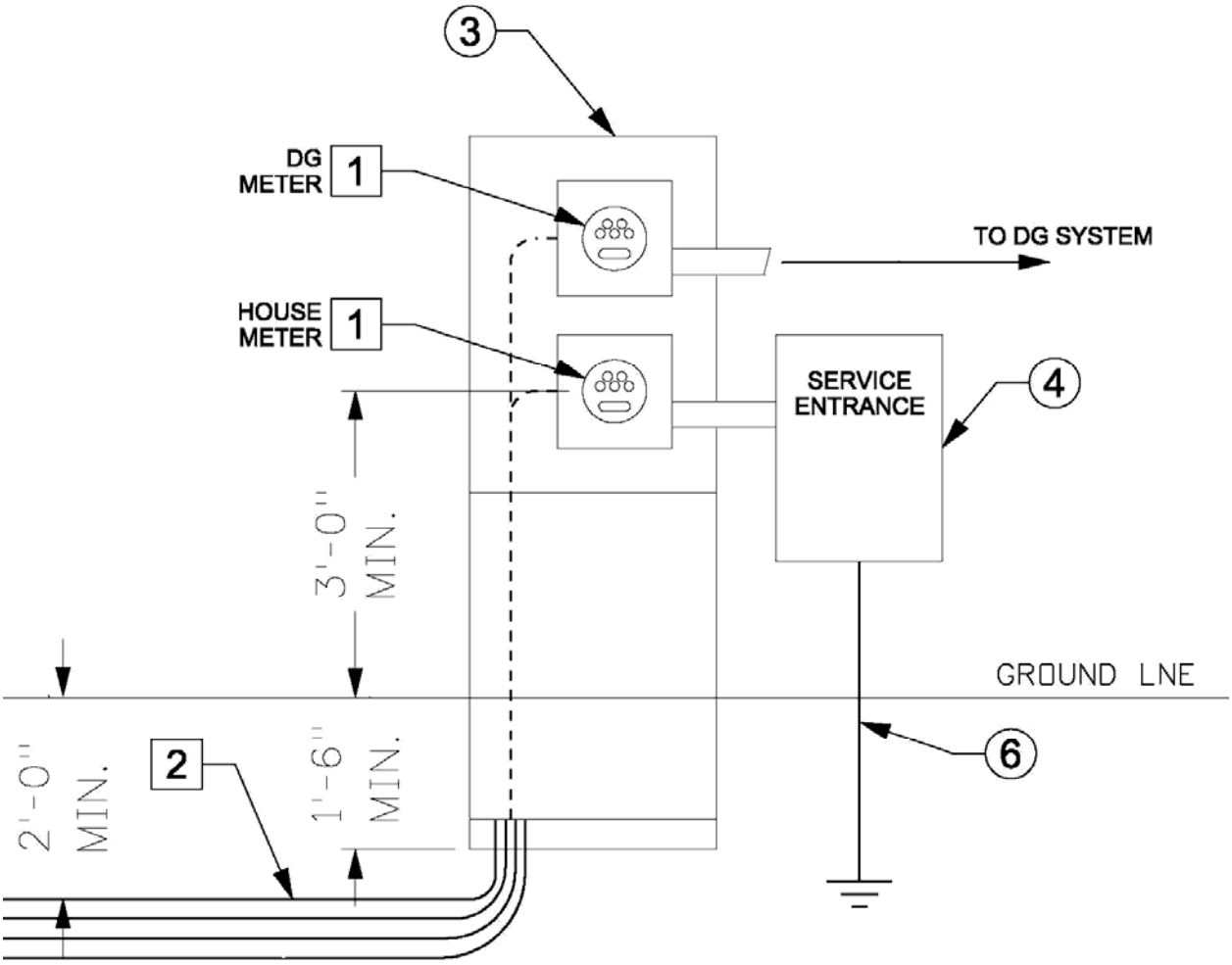

532. DUAL INSTRUMENT TRANSFOMER DISTRIBUTED GENERATION OPTIONAL - WALL MOUTED, PAD MOUNTED OR ON FIELD BUILT

301 – 800 AMP 1PH 120/240
301 – 800 AMP 3 PH 120/208
301 – 800 AMP 3 PH 277/480

☐ **Utility furnishes, installs & maintains**

1. Meter

○ **Customer furnishes, installs, & maintains**

2. Approved Meter Socket
3. Approved DG Meter Socket
4. Distributed Generation Service Entrance
5. General Service CT Cabinet
6. Approved Termination Cabinet
7. Distributed Generation CT Cabinet
8. Grounding in accordance with the code (Refer to page 156-159)
9. Optional Equipment Pad

NOTES:

1. The applicant shall label the interconnection disconnect switch "Interconnection Disconnect Switch" by means of a permanently attached sign with clearly visible and permanent letters. The applicant shall provide and post its procedure for disconnecting the DG facility next to the switch.
2. A separate DG disconnect is not required if DG Service Entrance includes a disconnect switch with a visible break and can be locked open.
3. The DG disconnect and its location shall conform to technical guidelines and state requirements. Consult with Alliant Energy for details and specifications.
4. Communication intersystem bonding is not allowed on or in any metering device.
5. Intersystem bonding may only be done at the ground rod(s), on the Grounding Electrode Conductor or ground bus in customers main disconnect.

△ **532. DUAL INSTRUMENT TRANSFOMER DISTRIBUTED GENERATION**
OPTIONAL - WALL MOUTED, PAD MOUNTED OR ON FIELD BUILT – CONTINUED
301 – 800 AMP 1 PH 120/240
301 – 800 AMP 3 PH 120/208
301 – 800 AMP 3 PH 277/480

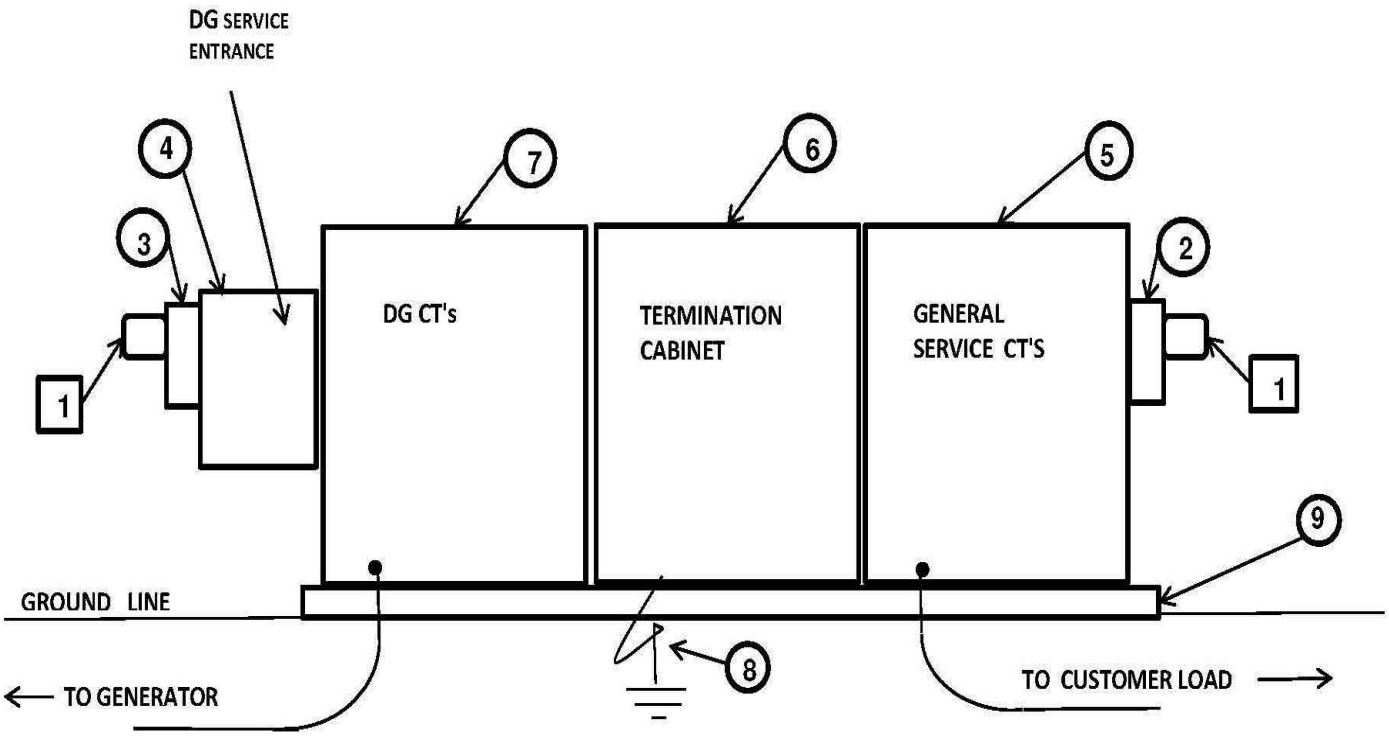

533. GROUNDING

A. In accordance with the **National Electrical Code** (NEC), a permanent and effective ground shall always be provided for all service entrance equipment. The neutral conductor shall also be grounded. See Section 501 for examples.

B. The grounding of electric installations is essential for the safety of those using the electric service, personnel maintaining the service, and is a safeguard for the Customer's equipment.

C. Intersystem Bonding is required by NEC 250.94. See section 156-159 for details.

534. GROUNDING ELECTRODE SYSTEM

Grounding Electrodes NEC 250.52:

1. Metal Underground Water Pipe. – NEC250.52 (A)(1)
2. Metal Frame of a Building or Structure - NEC250.52 (A)(2)
3. Concrete Encased Electrode (Ufer) - NEC250.52 (A)(3)
4. Ground Ring - NEC250.52 (A) (4)
5. Rod and Pipe Electrodes - NEC250.52 (A)(5)
6. Plate Electrodes. - NEC250.52 (A)(6)

A. If available on the premises at each building or structure served, each item in NEC 250.52 (A) 1-6, shall be bonded together to form the grounding electrode system.

B. The grounding electrode conductor (GEC)

1) The grounding electrode conductor shall not be run through meter sockets, Instrument Transformer Cabinets, or the utility portion of a metering pedestal.

2) The grounding electrode conductor may be terminated in one of the following.

a) In the service disconnect(s).

b) In the metering equipment containing a service disconnect

c) In the termination compartment of multiple metering installations.

C. Metal underground gas piping systems on the line side of the gas meter shall not be used as a grounding electrode or bonded to the grounding electrode system.

D. If two ground rods are installed (NEC 250.56), both ground rods shall be installed to left or right of meter socket but not in front. The grounding electrode conductor shall not pass in front of meter socket or pedestal.

Wall Mounted Meter Socket

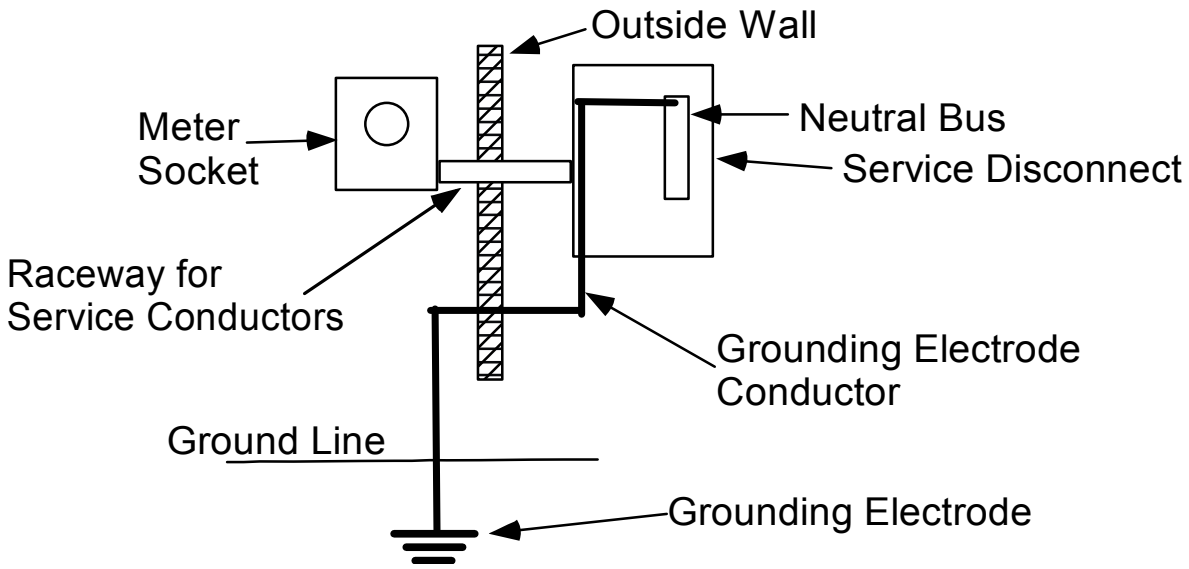

Grounding Single Self Contained Wall Mounted Meter Sockets and Pedestals

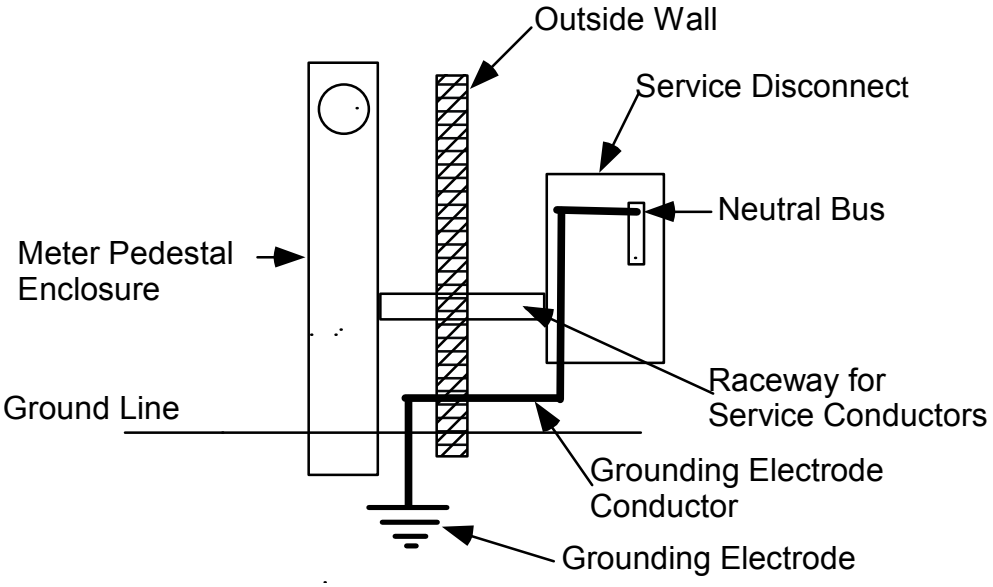

Instrument Transformer Cabinets

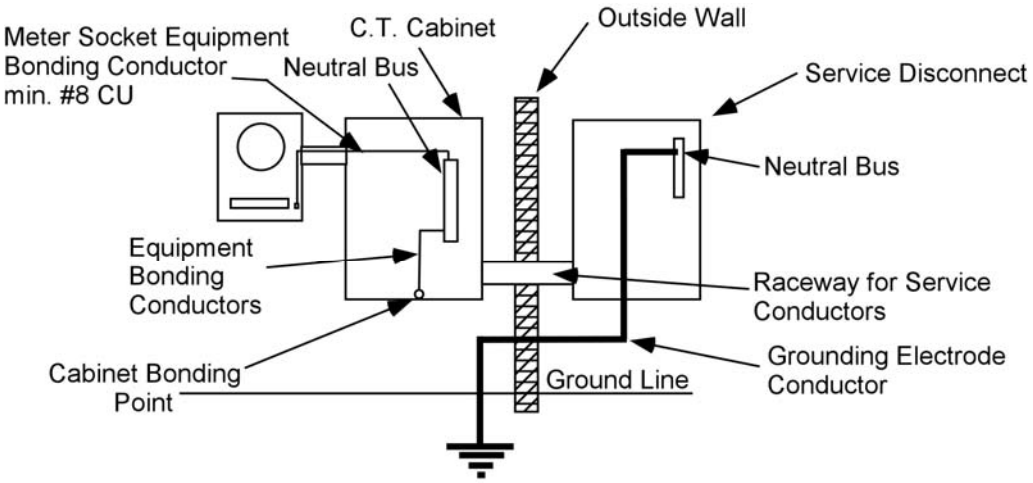

535. BONDING SERVICE ENTRANCE AND METERING EQUIPMENT

A. The electrical contractor is responsible for all bonding connections.

B. The termination cabinet, the CT cabinet and the meter socket enclosure shall be bonded to:

1. The system neutral when they are located on the line side of or at the main disconnect.

2. The equipment grounding conductor, when all of the following apply:

a. They are installed the load side of the main disconnect.

b. No service ground-fault protection is installed.

c. They are located immediately adjacent to the main disconnect.

C. Bonding shall be provided where necessary to ensure electrical continuity and the capacity to safely conduct any fault current likely to be imposed.

D. Intersystem bonding – CATV, Cable Dish systems and Telephone Companies shall bond to the grounding electrode system, if available. If the grounding electrode system is not readily available, bonding shall be done at the ground terminal bar in the main service entrance equipment. NEC 250.94 (2) or (3) only. This intersystem bonding shall not be done in or on the metering equipment. Wisconsin is the jurisdiction of the PSC. (PSC 114.099).

E. Meter disconnect switches nominally rated not in excess of 600 volts shall have a short circuit rating equal to or greater than the available short circuit current. These devices shall also be grounded and bonded according to parts V & VII of Article 250.

△ **536. BONDING CONDUCTOR SIZING**

A. Equipment bonding conductors on the supply side of service shall be sized according to NEC 250.66.

Metering Cabinet Rating, Amps	Svc Entrance Conductor Size (75ºC Alum.)	2011 NEC Table 310.15(B)(16) 90ºC Ampacity (per run)	Number of Runs	Total Ampacity	Minimum Equipment Bonding Conductor Size or Equivalent Area for Parallel Conductors (Aluminum, AWG/kcmil)
400	250	205	2	410	#2
	350	230	2	460	1/0
600	250	205	3	615	1/0
	350	230	3	690	1/0
800	250	205	4	820	2/0
	350	250	4	1000	4/0
1200	350	250	5	1250	250
	500	310	4	1240	250
	600	340	4	1360	300
1600	350	250	7	1750	350
	500	310	6	1860	500
	600	340	5	1700	500
2000	350	250	8	2000	350
	500	310	7	2170	500
	600	340	6	2040	500
2500	750	385	7	2695	750
	1000	445	6	2670	750
3000	750	385	8	3080	750
	1000	445	7	3115	1000

Metering Cabinet Rating	Service Entrance Conductor Size (75C Copper)	2011 NEC Table 310.15(B)(16) 75ºC Ampacity (per run)	Number of Runs	Total Ampacity	Minimum Equipment Bonding Conductor Size or Equivalent Area for Parallel Conductors (Copper, AWG/kcmil)
400	3/0	200	2	400	#4
	4/0	230	2	460	#2
	600	420	1	420	#2
600	3/0	225	3	675	#2
	4/0	260	3	780	#1
	300	320	2	640	#1
800	350	310	3	930	1/0
	500	380	3	1140	2/0
1200	350	350	4	1400	4/0
	500	430	3	1290	4/0
	750	475	3	1425	250
1600	350	310	6	1860	250
	500	380	5	1900	250
	600	420	4	1680	300
	750	475	4	1900	300
2000	350	310	7	2170	300
	500	380	6	2280	350
	600	420	5	2100	400
	750	475	5	2375	400
2500	500	380	7	2660	400
	600	420	6	2520	500
	750	475	6	2850	500
3000	500	380	8	3040	500
	600	420	8	3360	600
	750	475	7	3325	600

THIS PAGE INTENTIONALLY LEFT BLANK