CHAPTER 11

ELECTRIC SERVICE RULES – CLEARANCES

1101. MINIMUM CLEARANCES FOR SERVICES 300 VOLTS AND BELOW.

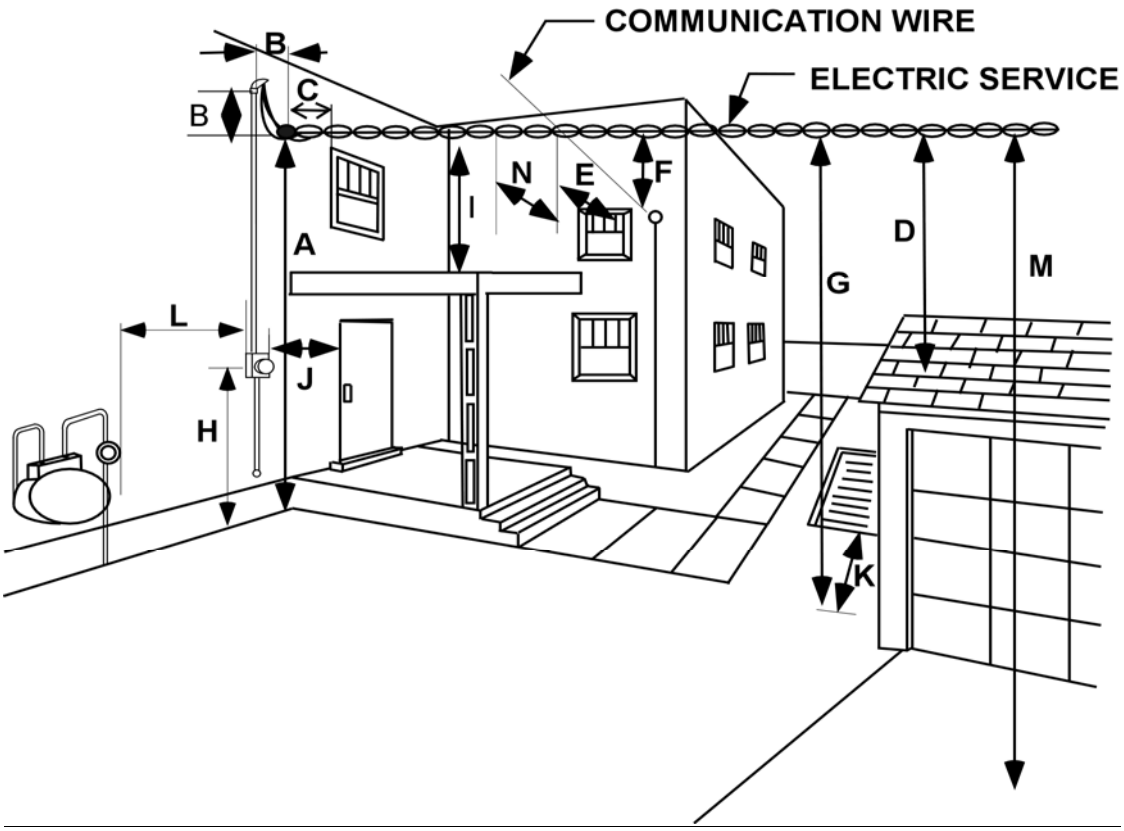

The NEC and NESC prescribe minimum clearances for service wires.

A. 10-feet minimum to drip loops of triplex, if voltage to ground is less than 150 volts.

B. 1-foot minimum and 2-feet maximum horizontal, 6 to 12 inch vertical above or below service head and attachment.

C. Exposed conductors shall be no less than 3-feet from window, doors, porches, fire escapes, awnings, signs and similar construction, when service is attached to building. The *exposed* service conductors shall be 3-feet from all sides except top of window. When the service conductors are attached above a window the drip loop shall not sag below the top of the window.

D. Iowa and Minnesota follow the NESC clearances from Table 234-1. In those states where the service passes over a building, but does not attach, the vertical roof clearance shall be 11.0-feet, if the roof is accessible, or 3.5-feet, if the roof is not accessible. In Wisconsin, PSC 114.234.1 changes the NESC requirements where the service passes over a building but does not attach, to 8 feet over a roof that is non-accessible and 3 feet if the roof is non-accessible and has a 4/12 slope.

E. 5-feet when wires pass opposite a window, where the service is attached. (NESC table 234-1)

F. 2-feet from communication wires. (NESC table 233-1)

G. 12-feet. If the height of building does not permit 12-feet, it can be reduced to 10.5-feet. If the voltage to ground is less than 150 volts, it can be reduced to 10-feet.

H. Center of meter 4 - 5 feet above finished grade.

I. On buildings where service attaches, the vertical clearance over a porch or balcony shall be a minimum of **10** feet if the area is accessible. For inaccessible areas it may be reduced. (NESC 234C 3D)

J. When a door opens outward, mount the meter socket a door's width plus 6-inches on the hinged side away from the door opening. Don't mount the meter along high traffic passageways.

K. The clearances in section 1102 apply except for triplex cables meeting 230.C.3. (NESC) which are 10-feet or more horizontally from the edge of the pool, diving platform or diving tower.

L. A minimum *horizontal* separation of 3-feet shall be maintained between natural gas service equipment (**vented regulators**) and electric metering or termination equipment. Transformers shall have a minimum separation of 5-feet from natural gas service equipment. A minimum separation of 5-feet shall be maintained between electric metering or termination equipment and liquid petroleum facilities on site but not filled on site. If the liquid petroleum facilities are filled on site the minimum separation is 10-feet.

M. 16 ft. over a driveway, may be reduced on residential only drives to 12.5-feet for insulated drops limited to 300 Volts to ground or 12.0-feet for triplex service drops limited to 150 Volts to ground. (NESC table 232-1)

N. The horizontal clearance to buildings, signs etc. where services (at rest) pass but are not attached to the building at this location is 4.5-feet. If the drop meets (NESC) 230C1 the clearance may be reduced to 2-feet if the building is maintenance free. If the drop is subject to wind movement, then the horizontal clearance is 3.5-feet at blow out position.

1102. MIN. CLEARANCES FOR SERVICES 300 VOLTS AND BELOW, OVER POOLS.

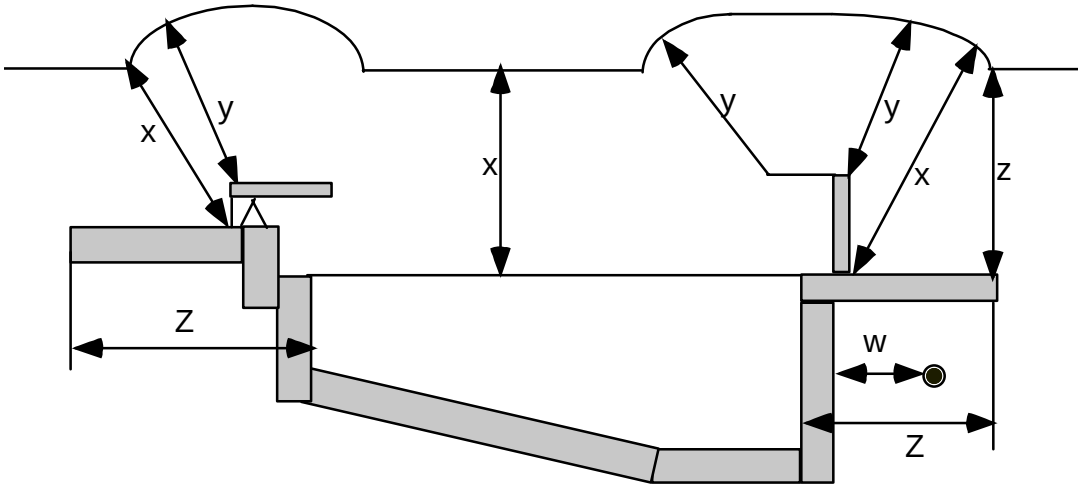

	Insulated supply or service cables, 0 to 750V to ground supported on and cabled together with an effective grounded bare messenger or effectively grounded neutral conductor	All other supply or service drop conductors	Underground conductors
X- Clearances in any direction to the water level, edge or water surface, base of diving platform or permanently-anchored raft	**22.5-FT.**	**25-ft**	
Y-Clearance in any direction to the diving platform or tower	**14.5-ft.**	**17-ft.**	
Z-Horizontal limit of clearance measured from the inside wall of the pool	This limit shall extend to the outer edge of the structures and not less than 10-ft.	This limit shall extend to the outer edge of the structures and not less than 10-ft.	
W-Clearance from all underground conductors from the outside edge of the pool			**5-ft.**

1103. CLEARANCE FOR SERVICES OVER STATE AND FEDERAL HIGHWAYS

Clearance	Iowa	Minnesota	Wisconsin
Height in Feet	20	22	17

1104. SERVICE CONDUCTOR CLEARANCE FROM SIGNS

Conductor or Cable	Clearance in Feet
Horizontal (displaced by wind)	3.5
Vertical	3.5

1105. SERVICE MAST INSTALLATION – ROOF CLEARANCES, CLEARANCE OF SERVICE DROP TERMINATING ON SUPPORT MAST, 300 Volts or LESS.

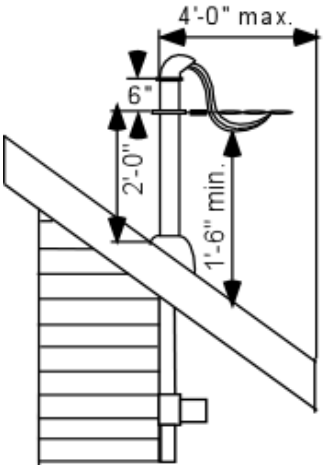

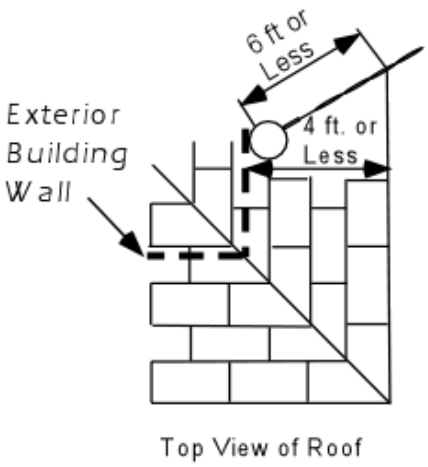

NOTES:

1. If not more than 6- feet (4 feet horizontally) of service conductor passes over the roof overhang to attach to a service mast, through the roof and the service support is located not more than 4-feet from the roof edge, the vertical clearance of the service can be reduced to 18".
2. No coupling is allowed in conduit between the weather head and bottom of the soffit.
3. If the roof has a slope of 4/12 or greater and 6 feet or more of the service conductors pass over the roof horizontally, then the minimum clearance allowed is 3 feet.
4. If roof is flat or has a slope less than 4/12 and 6 feet or more of the service conductors pass over the roof or roof overhang, the minimum clearance is 8 feet.
5. Eight-feet minimum clearance is required over any roof that is accessible through a doorway, ramp, stairway or permanently mounted ladder.

1105. SERVICE MAST INSTALLATION – ROOF CLEARANCES, CLEARANCE OF SERVICE DROP TERMINATING ON SUPPORT MAST, 300 Volts or LESS.-Continued

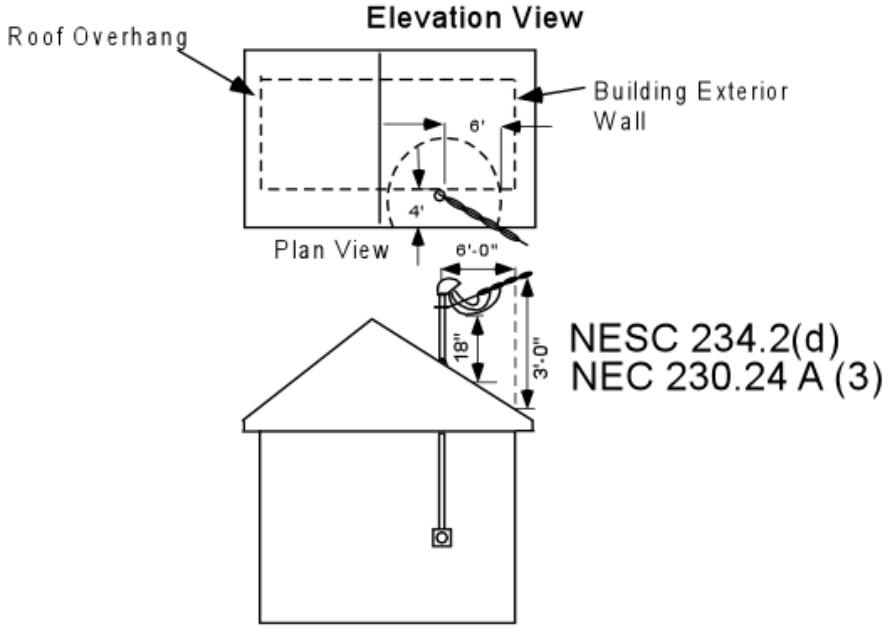

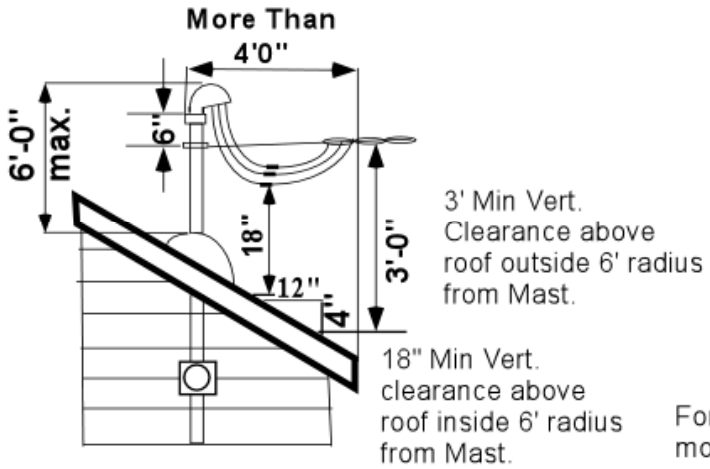

Roof Slope 4"X 12" or Greater

NEC 230.24 A(2)

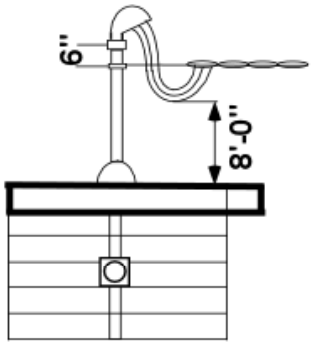

Flat Roof

NEC 230.24 A(3)

For service drop crossing more than 6' of flat roof or roof overhang with less than 4 X 12 slope a vertical clearance of 8 ft. is required.
Where a service drop crosses less than 6' of overhang the vertical clearance requirement is 18" regardless of roof slope.

1106. CLEARANCE ENVELOPE FOR GRAIN BINS FILLED BY PORTABLE AUGERS, CONVEYORS AND ELEVATORS.

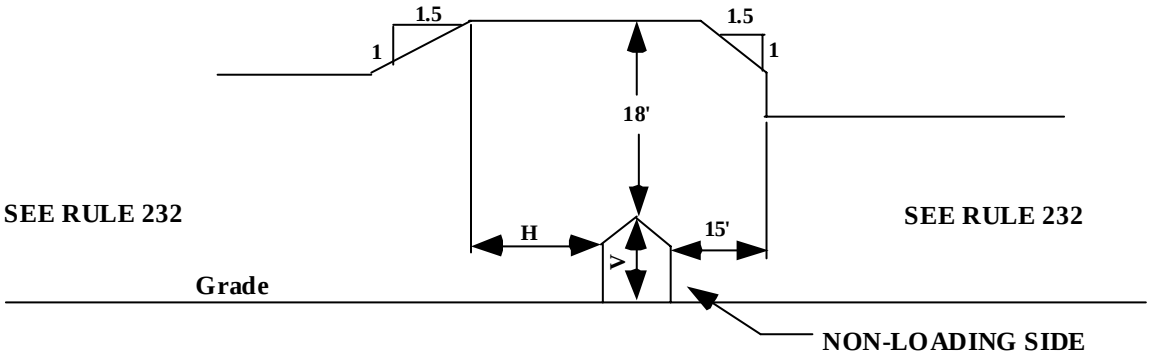

V+ Height of highest filling or probing port on grain bin

H=V+18 ft.

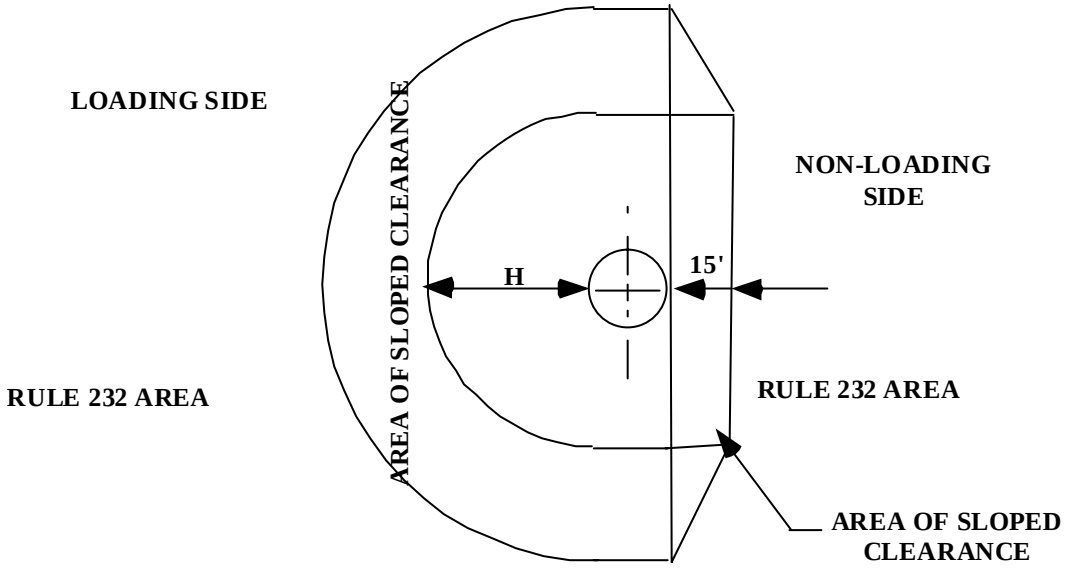

Note: 18' Clearance Must Be Maintained in All Directions From A Probe Port

Rule 232 – See NESC.

1107. SPECIAL HORIZONTAL CLEARANCES FOR OVERHEAD CABLE SERVICES. (0-480 VOLTS)

A. ABOVE-GROUND FLAMMABLE LIQUID STORAGE TANKS AND LP GAS STORAGE TANKS

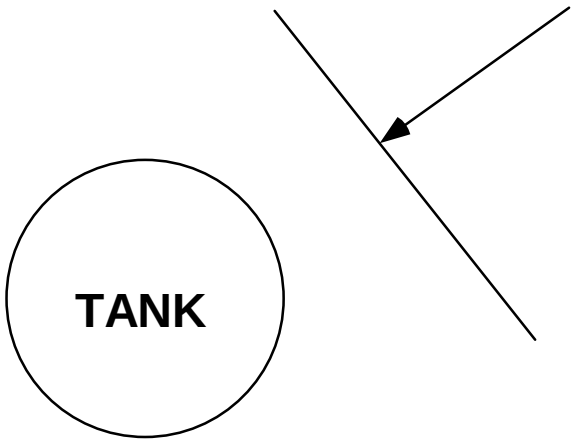

8' Minimum horizontal clearance (this requirement does not apply to LP gas tanks of 1000 gallons or less).

B. GASOLINE DISPENSING AND SERVICE STATIONS

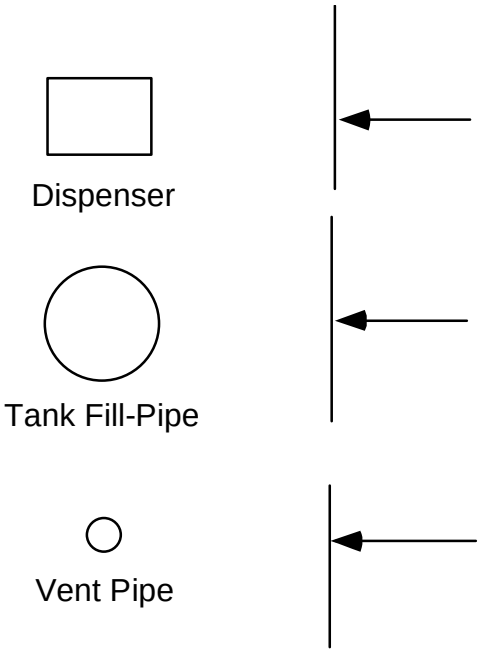

20' Minimum horizontal clearance.

10' Minimum horizontal clearance.

3' Min Horizontal or Vertical clearance

1107. SPECIAL HORIZONTAL CLEARANCES FOR OVERHEAD CABLE SERVICES (0-480 VOLTS) – CONTINUED

C. Wells (Wisconsin Only)

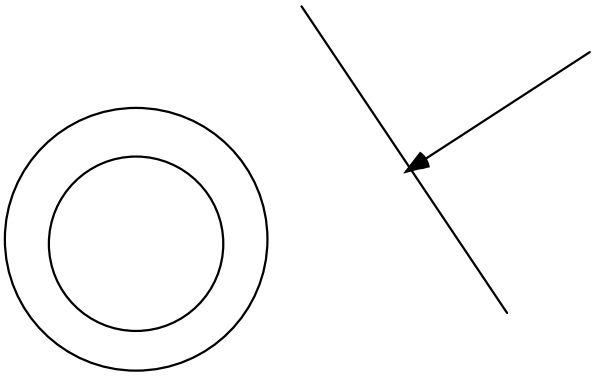

Wisconsin Only
Minimum horizontal clearance between wells and overhead conductors shall be at least 3/4 of the required vertical clearance of the conductor to ground

D. Antennas (Wisconsin Only)

Antenna System Support – Poles used for electric power or for communication lines may not be used for supporting or for guying antenna systems.

Setbacks – No wires, cables, or guy wires shall extend over any street or other public thoroughfare or over any electric power or communication lines.

E. Legally required standby systems (Wisconsin Only)

The enclosure of the alternate source of power located outdoors for legally required standby systems shall be located at least 10 feet horizontally from any combustible portion of a Type III, Type IV, or Type V building and at least 20 feet from an outdoor electrical transformer, electrical metering, service equipment or normal power distribution equipment.

NOTE:

These dimensions may be reduced where a noncombustible barrier is installed that extends at least 3 feet beyond each side of the alternate power source and transformer. The height of the barrier shall be at least one foot above the top of the transformer, electrical metering, service equipment, or alternate power source, whichever is higher.

1108. PAD-MOUNT TRANSFORMER LOCATIONS

Alliant Energy shall approve the location of all transformer pads. Pad locations shall be in accordance with the requirements of **NEC, NESC, National Fire Protection Association, Environmental Protection Agency and any state or local requirements**. In addition, they are to be located far enough from the building overhang so they will not be subject to damage by falling snow and ice. Pad-mounted transformer locations shall be graded for proper drainage and be readily accessible by truck or other means for change-out. Where danger of snow plowing or traffic damage exists, barriers consisting of concrete filled pipe shall be provided for protection.

Transformers shall have a minimum separation of 5-feet from natural gas service equipment. A minimum separation of 5-feet shall be maintained between transformers and liquid petroleum facilities on site but not filled on site. If the liquid petroleum facilities are filled on site the minimum separation is 10-feet.

1108A. Emergency Systems (Wisconsin Only Requirement).

The enclosure for emergency systems shall be located at least 20 feet from an outdoor electrical transformer, electrical metering, service equipment or normal power distribution equipment.

These dimensions may be reduced where a noncombustible barrier is installed that extends at least 3 feet beyond each side of the alternate power source and transformer. The height of the barrier shall be at least one foot above the top of the transformer, electrical metering, service equipment, or alternate power source, whichever is higher.

1108B. Legally Required Standby Systems (Wisconsin Only Requirement).

The enclosure for legally required standby systems shall be located at least 20 feet from an outdoor electrical transformer, electrical metering, service equipment or normal power distribution equipment.

These dimensions may be reduced where a non-combustible barrier is installed that extends at least 3 feet beyond each side of the alternate power source and transformer. The height of the barrier shall be at least one foot above the top of the transformer, electrical metering, service equipment, or alternate power source whichever is higher.

1109. NON-COMBUSTIBLE BUILDING WALLS*

Pad-Mount oil insulated transformers may be located no closer than 3-feet to non-combustible walls if all of the following clearances are maintained from doors, windows, and other building openings:

a. Doors:

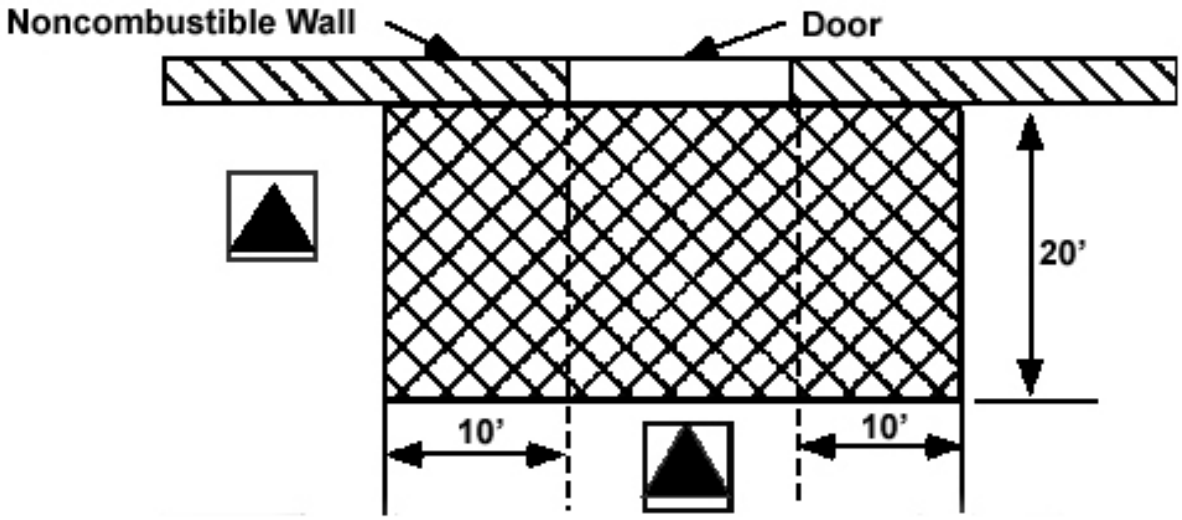

Pad-Mount oil insulated transformers shall not be located within a zone extending 20-feet outward and 10-feet to either side of the building door.

* NON-COMBUSTIBLE WALLS – Are walls where the framing and sheeting materials will not burn and they will in no way contribute to the burning process.
Metal skinned wood framed buildings are considered to be combustible.

1109. NON-COMBUSTIBLE BUILDING WALLS, CONTINUED.

b. Air-Intake Openings:

Pad-Mount oil insulated transformers shall not be located within a zone extending 10 feet outward and 10 feet to either side of an air intake opening. Transformers may be located within the zone beneath an air intake opening provided there is a minimum 25 feet diagonal separation between the transformer and the opening.

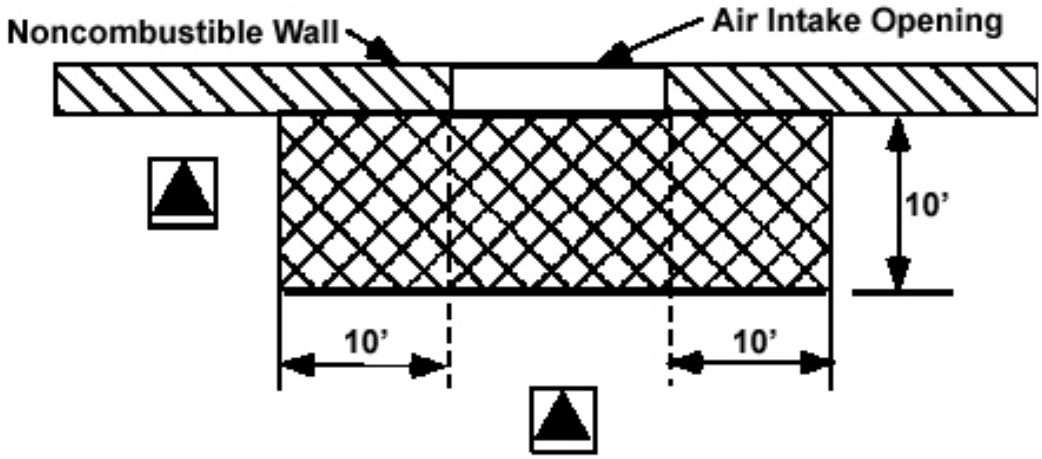

c. Windows or Openings Other than Air Intake

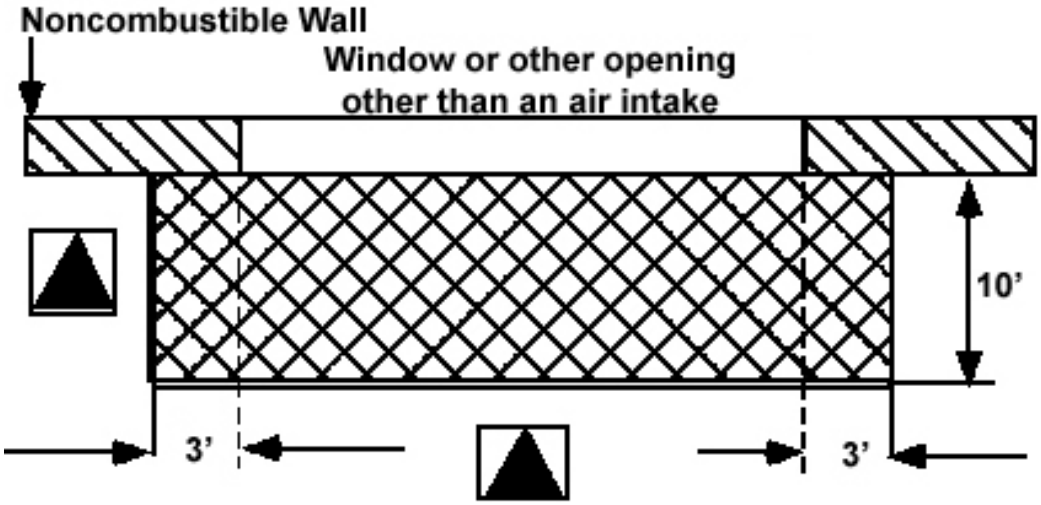

1. Pad-Mount oil insulated transformers shall not be located within a zone extending 10-feet outward and 3-feet to either side of a building window or opening other than an air intake.

1109. NON-COMBUSTIBLE BUILDING WALLS, CONTINUED.

2. Pad-Mount oil insulated transformers shall not be located less than 5-feet from any part of a second story window or opening other than an air intake.

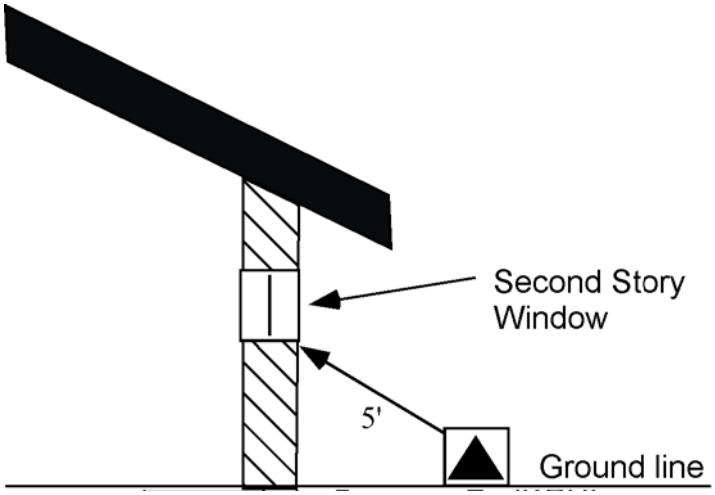

1110. COMBUSTIBLE BUILDING WALLS

A. Pad-Mount oil insulated transformers in sizes up to and including100 KVA shall be located according to the provisions set forth in the non-combustible transformers walls section.

B. Transformers greater than 100 KVA shall be located a minimum of 10-feet from a combustible wall in addition to the clearances from building doors, windows and other openings set forth for non combustible walls. An oil-collecting sump shall be installed for transformers in sizes exceeding 500 KVA if the immediate terrain is pitched toward the building.

1111. BARRIERS

If the specifed clearances on page 164 cannot be obtained, a fire resistant barrier may be constructed in lieu of the separation. The following methods of construction are acceptable.

a. Non-combustible Walls – The barrier shall extend to a projection line from the Corner of the pad-mount to the farthest corner of the window, door or opening in question. The height of the barrier shall be 1 feet above the top of the pad-mount transformer.

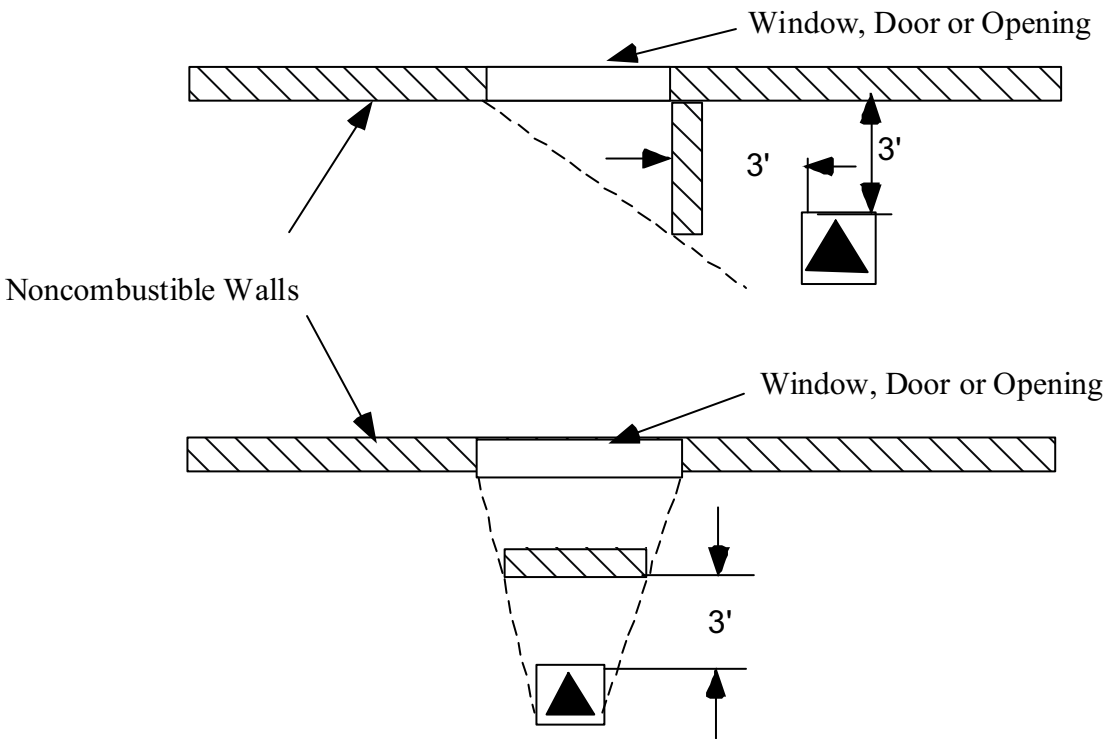

1111. BARRIERS, CONTINUED.

b. Combustible Walls – The barrier shall extend 3-feet beyond each side of the pad-mount transformer. The height of the barrier shall be 1-foot above the top of the pad-mount transformer.

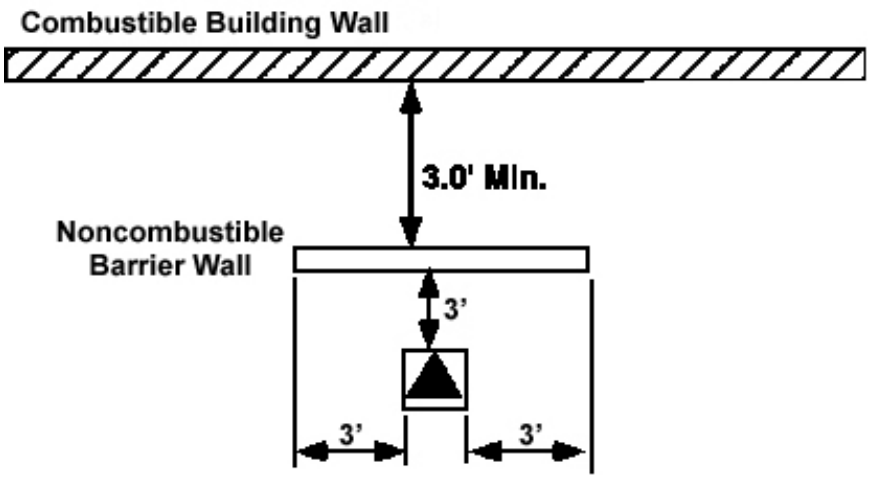

1112. FIRE ESCAPES.

Pad-Mount oil insulated transformers shall be located such that a minimum outward clearance of 20-feet, and a minimum clearance of 10-feet to either side of the point where the fire escape touches the ground shall be maintained at all times.

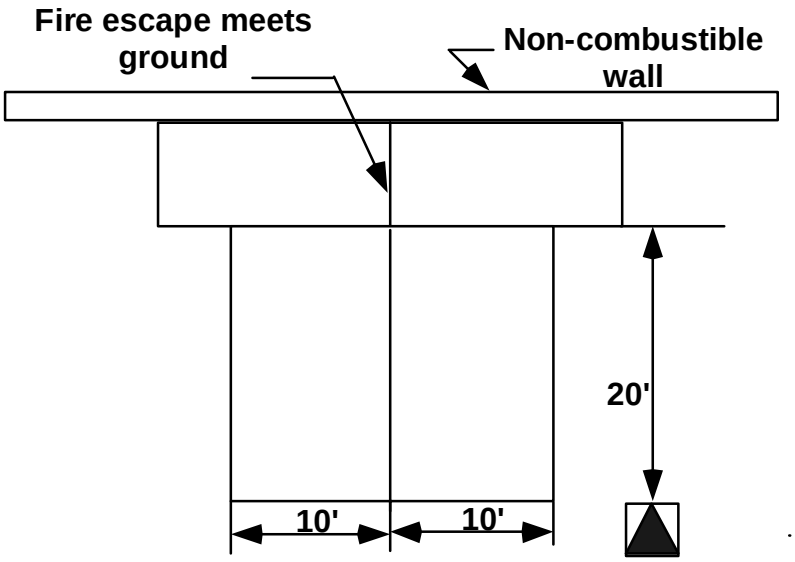

1112. FIRE ESCAPES CONTINUED.

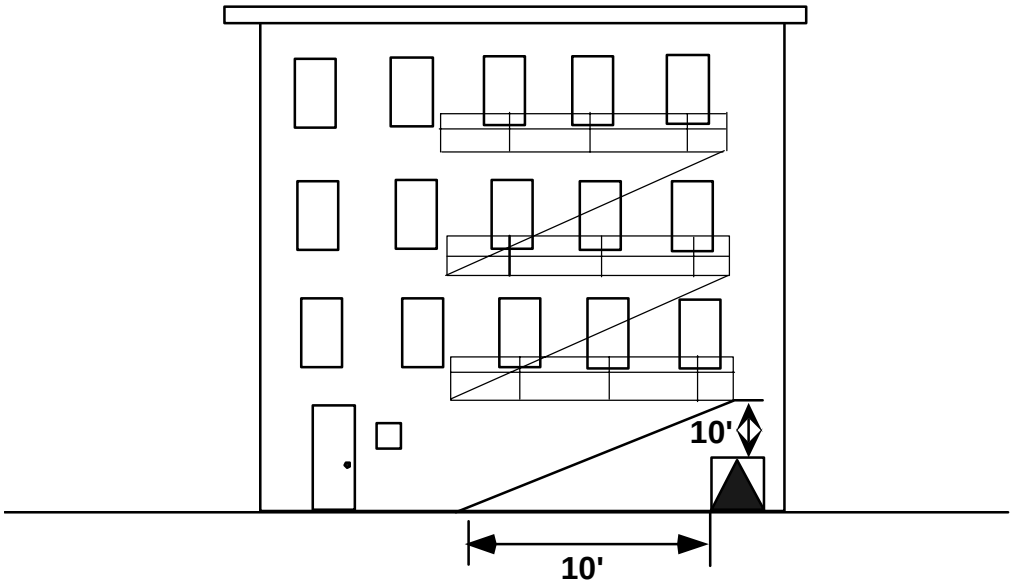

If the pad-mounted transformer is located under the fire escape a vertical clearance of 10-feet shall be maintained.

1113. SINGLE-PHASE, PAD-MOUNT TRANSFORMER PROTECTION.

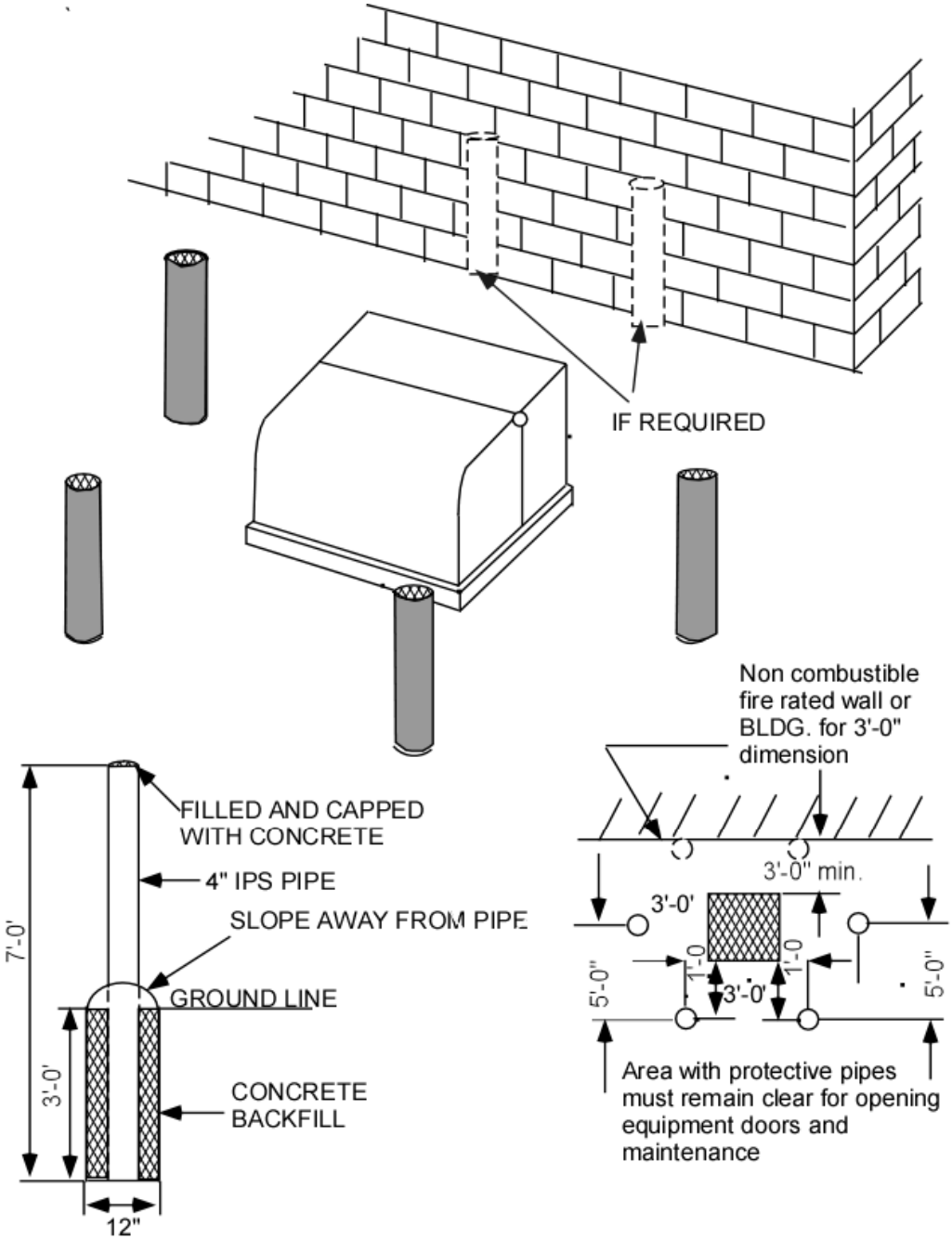

1114. THREE-PHASE PAD-MOUNT TRANSFORMER PROTECTION.

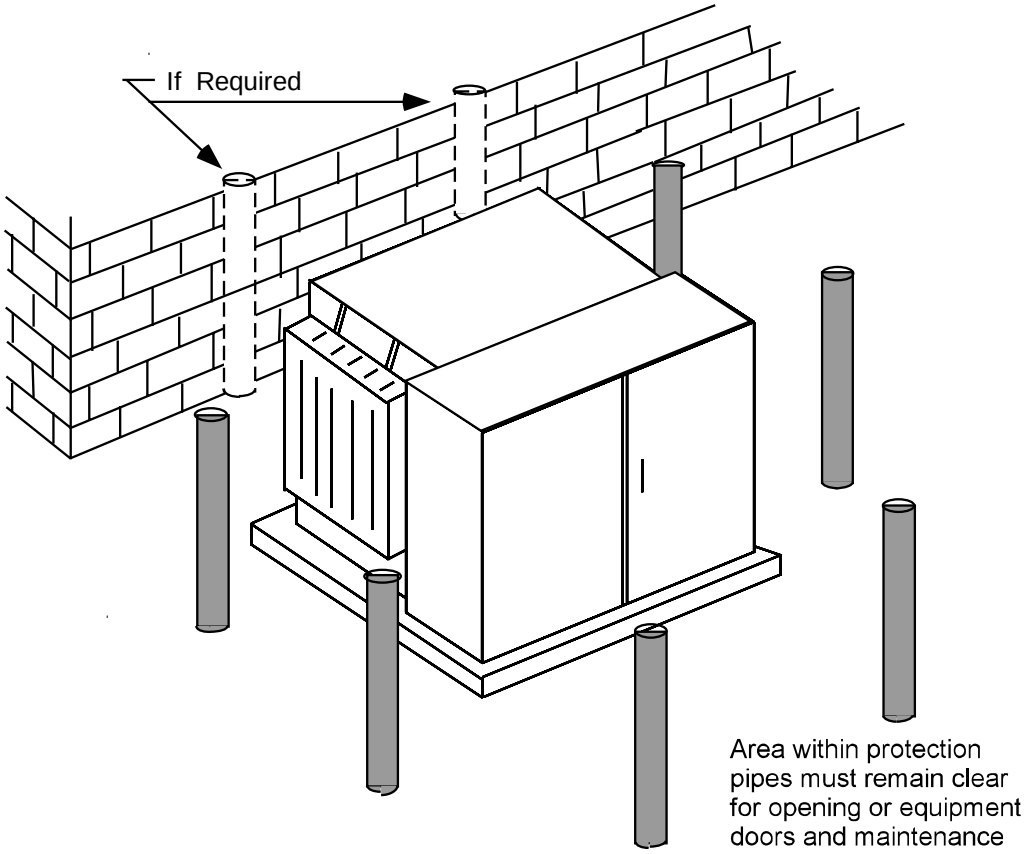

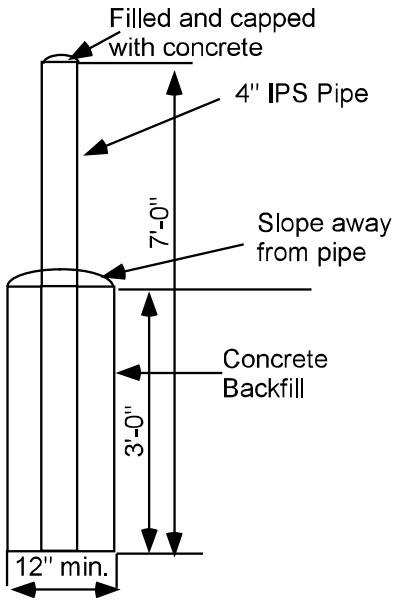

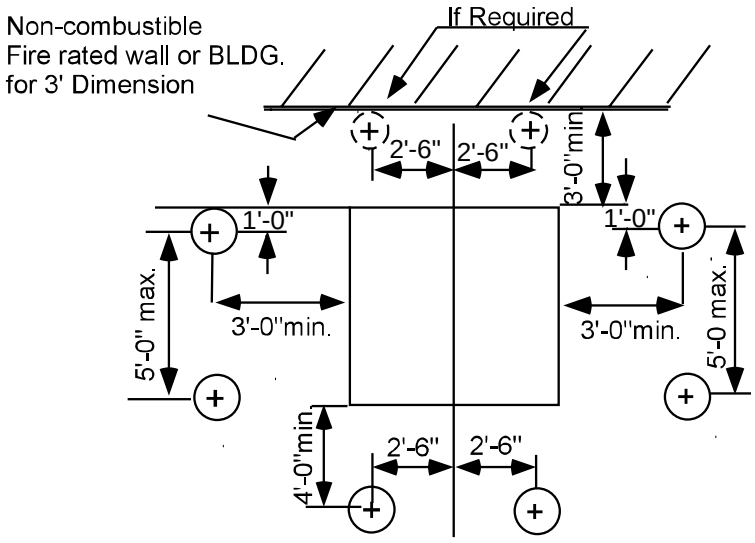

THIS PAGE INTENTIONALLY LEFT BLANK