# CHAPTER 10

## ELECTRIC SERVICE RULES – PRIMARY SERVICE

### 1000. GENERAL

**A.** **Primary Service** is defined as a service where Alliant Energy meters at primary voltage and the customer owns the facilities from the metering point on. The customer may lease primary voltage transformer/s from Alliant Energy.

**B.** Three-Phase, Primary Voltage Service, is available at Alliant Energy for the following voltages: 4.16 kV, 12.4 kV, 13.2 kV, 13.8 kV, 24 kV and 24.9 kV. Not every voltage is available at all locations. This chapter contains information concerning service at distribution voltages. For service, please contact Alliant Energy at 1-800-Alliant.

**C.** Primary Voltage Service, at a single-phase distribution voltage is available from Alliant Energy. Please consult Alliant Energy for single-phase primary service requirements. See Electric Service Equipment Chapter 2 for required single operated, grade-level air break switches.

**D.** Alliant Energy furnishes, installs, and maintains the primary service and metering equipment in accordance with Alliant Energy's applicable rates, extension rules and the requirements of the Electric Service Rules Chapter 1. Alliant Energy also furnishes installs and maintains all primary service conductors and cable terminators up to the point of service.

**E.** The Customer furnishes, installs and maintains all service entrance facilities at the point of service including cabinets to house metering CT's and PT's and the installation of 1 inch galvanized steel metering conduits where required.

**F.** The Customer shall make application to Alliant Energy for the proposed primary service and obtain approval of the location, equipment, and design before starting installation of the service entrance. Detailed shop drawings will be required for underground service terminations and metering sections in switchgear.

**G.** A 10-foot wide cable route shall be free of all obstructions, within 6 inches of final grade for all underground services, prior to the installation of Alliant Energy's underground service lateral. The customer shall also provide a 20 foot wide route for all single phase overhead facilities and 30 foot wide route for all three phase overhead facilities. The Customer will incur all costs for clearing either the overhead or underground routes, including tree removal, building and/or foundation or rubble removal and any other obstacles encountered.

**H.** The Customer shall provide the necessary easements, at no expense to Alliant Energy for the installation and maintenance of the Primary Service. No permanent buildings or trees shall be placed in the easement area.

**I.** A plan view drawing of the installation shall be submitted to and approved by Alliant Energy Engineering and Metering, prior to finalizing orders for service equipment to avoid delays and unnecessary expense for the Customer and Alliant Energy. Service entrance equipment located at the point of service shall include a three-phase, gang-operated load break disconnecting means and over current protection for a three phase service or a single-phase handle operated disconnect and over current protection for a single-phase service. The disconnecting device shall be located to provide a visible open and operating capability to both the Customer and Alliant Energy. The sequence of the equipment toward the load shall be **meter-switch-fuse** with variations approved by Alliant Energy. (See following Diagram).

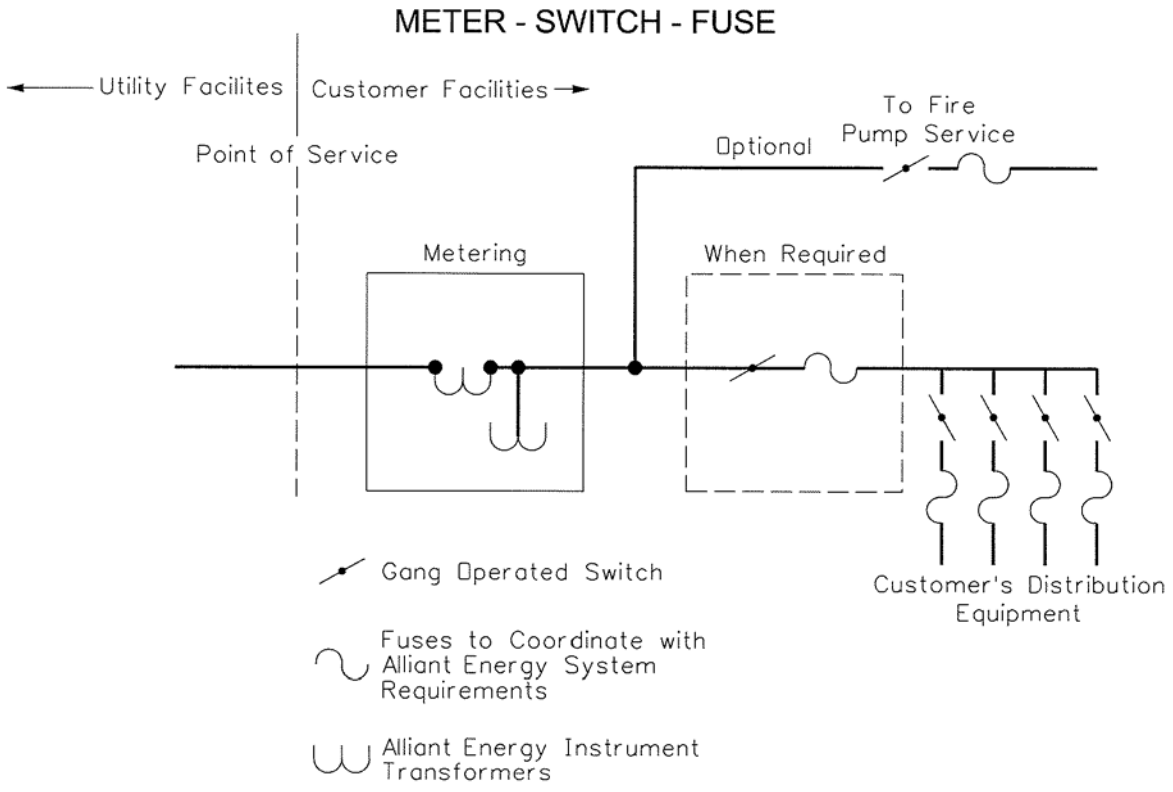

THIS PAGE INTENTIONALLY LEFT BLANK

## 1001. OVERHEAD PRIMARY SERVICE

○ **Customer furnishes, installs, and maintains:**

6. Arresters
7. Meter Socket
8. Grounding
9. Poles
10. Overhead primary conductor
11. Primary fusing
12. Conduit for metering
13. Gang Operated Switch
14. Insulator in switch operating rod handle

☐ **Alliant Energy furnishes, installs, and maintains:**

1. Overhead primary service conductors
2. PT's and CT's with mounting hardware
3. Socket type meter
4. Dead-end shoes and insulators
5. Disconnect and arresters

**NOTES:**

**1.** Customer shall provide two poles of adequate height that allows ground clearance in accordance with all codes for primary conductors including the neutral. The poles shall be of adequate class to provide strength to support conductors with ice and wind loading. Further information on this can be obtained from Alliant Energy.

**2.** The customer's isolation switch shall be gang-operated from grade level, be *lockable in the open position*, be operable by the Customer and Alliant Energy, have means to show visible open contacts, be capable of interrupting all load being served, be capable of carrying all load requirements and withstanding faults of 10,000 amps RMS symmetrical.

**3.** Main fuses or breakers shall have adequate load carrying capacity and a minimum interrupting rating of 10,000 amps, RMS symmetrical. Fuses and breakers shall coordinate with Alliant Energy's system. The Customer shall verify this with Alliant Energy.

**4.** The Customer shall supply a minimum 96" of vertical spacing for the installation of Alliant Energy's metering bracket with current or potential transformers. Alliant Energy will supply the bracket for these transformers.

**5.** Branch circuit switches, operated at primary voltage, should meet operating criteria similar to the main fuse or breakers to provide adequate protection to the transformers served. Fuse size for Alliant Energy owned transformers will be specified by Alliant Energy

**6.** The Customer shall provide adequate climbing space on the main service entrance structure as specified in the National Electrical Safety Code.

**7.** Metering conduit – 1 inch rigid steel conduit with weatherhead. Maximum allowable conduit run is 50 feet with a total of 180 degrees in bends. Runs longer than 50 feet or runs with more than 180 degrees in bends will require approval by Alliant Energy. Consult Metering for appropriate PT's and CT's and ordering procedure. The meter cable will be furnished and installed by Alliant Energy.

## △ 1001. OVERHEAD PRIMARY SERVICE, CONTINUED.

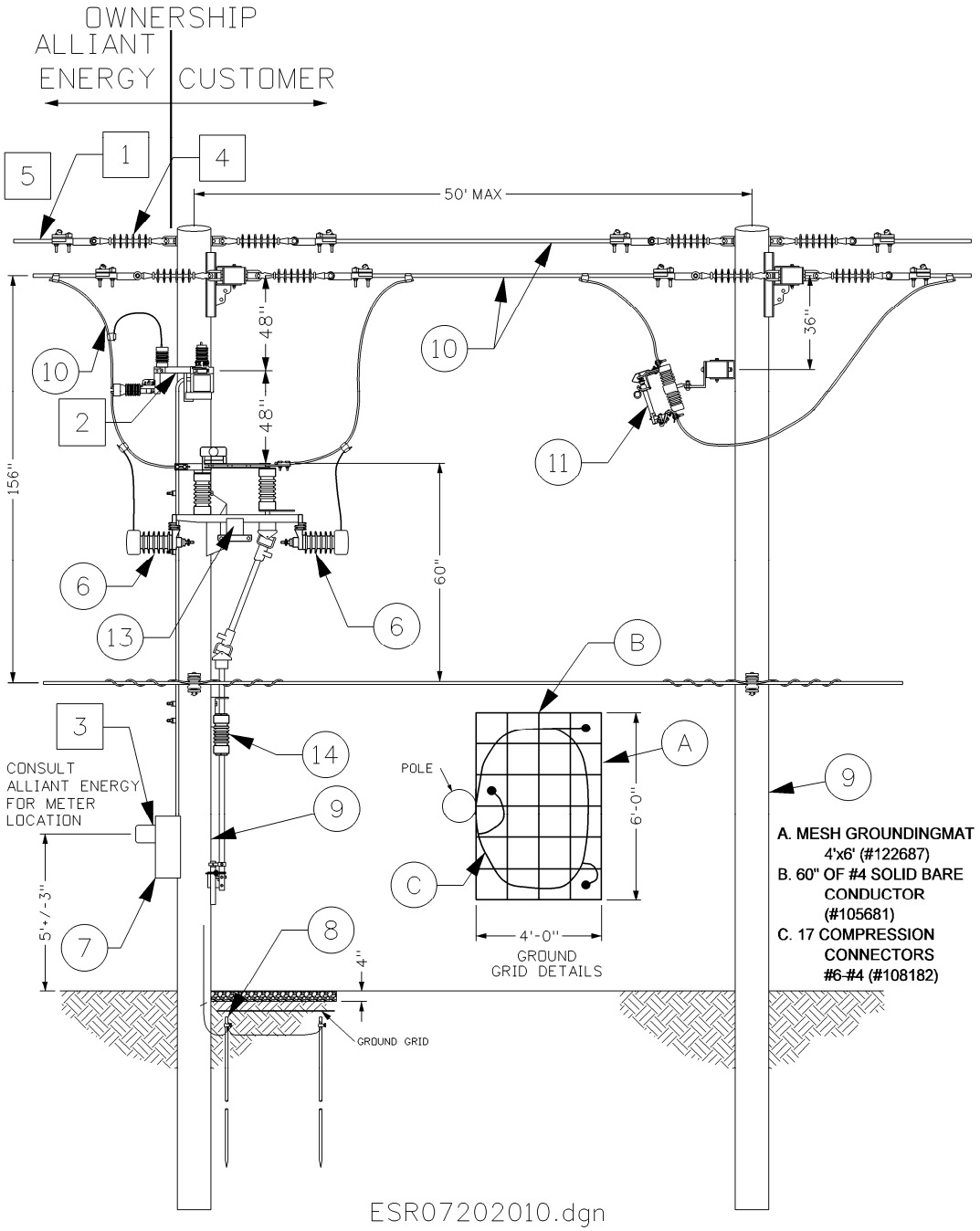


*Another pole may be installed within 50' distance. If the overhead line extends farther than 50' a main fuse needs to be installed on a pole that is within 50' of the main disconnect as shown above. (NEC230.91). Install a set of arresters on the closest upstream pole from the metering pole to protect the CT's/PT's on closest upstream pole.

## 1002. UNDERGROUND PRIMARY SERVICE

○ **Customer furnishes, installs and maintains**

5. Primary Switchgear
6. 6" conduit
7. 1" metering conduit
8. Metering socket
10. Grounding - Per NEC 250
11. Switchgear pad

☐ **Alliant Energy furnishes, installs and maintains**

1. Underground primary service cables
2. Terminators
3. PT's and CT's
4. Socket type meter

**NOTES:**

1. Switchgear drawings shall be submitted to Alliant Energy for approval before ordering
2. Utility cables entering the switchgear bus shall be bottom connected. Clear space shall be provided for primary conductors below the termination points including room in the bottom of the cabinet(s) for 6" conduit to enter directly below the center point of the three termination points.
3. All bus and cable bracing shall have adequate strength to prevent movement or damage to cable or bus at a maximum fault level of 10,000 amps (RMS symmetrical).
4. A single service disconnect may not be required. If six or fewer branch circuits are present the service disconnect is not required by code. However, if **on-site generation** is present, the service disconnect (or isolation switch) is required, regardless of number of branch circuits. It shall be gang operated, be operable by the customer and by Alliant Energy, have means to show visual open contacts, be capable of carrying full load requirements and withstanding faults of 10,000 amps (RMS symmetrical).
5. Branch circuit switches should meet operating criteria similar to the service main disconnect.
6. Customer owned main fuses or breakers shall have adequate load carrying capacity and a minimum interrupting rating of 10,000 amps (RMS symmetrical) and shall coordinate with Alliant Energy's system.
7. Metering transformer space shall be adequate for three voltage transformers (PTs) and three current transformers (CTs). Consult Metering Dept. for appropriate PT's and CT's, ordering procedure and shipment details to manufacturer for installation.
   Alliant Energy will supply PT's and CT's **similar** to
   General Electric JVM-5 (Indoor) PT's and
   General Electric JKM-5A (Indoor) CT's for **15 kV** services.

Alliant Energy will supply PT's and CT's **similar** to
General Electric JVW-6 (Outdoor) PT's and
General Electric JKW-6A (Outdoor) CT's for **24.9 kV** service.
For 24.9 kV service, the customer shall provide fuse holders similar to
GE Type EK-1C for the PT's. Alliant Energy will supply the fuses. For either voltage the PT's should be tapped on the source side of the CT's. PT's and CT's shall be able to be mounted so that the nameplates can be read from the front (preferred) or sides. The meter cable will be furnished and installed by Alliant Energy.

**8.** A two-hole NEMA standard lug landing shall be provided for each service lateral cable in the termination bay including the neutral bus. Minimum height of 54" is required from termination lug to floor.

**9.** Hinged doors with provisions for locking with an Alliant Energy padlock for direct working access to the Termination and Metering bays. In the metering bay, a second wire mesh inner door shall be provided.

**10.** 10 feet of clearance shall be provided in front of Termination and Metering bays. If Alliant Energy is under contract to operate and maintain this switchgear, then the above provisions apply to all bays of the switchgear. Arrangements for double locking or other special procedures shall be discussed with Alliant Energy.

**11.** Grounding bails shall be provided for all three phases and the primary neutral bus at the Termination bay and Metering Bay. If Alliant Energy is under contract to operate and maintain this switchgear, then the above provisions apply to all bays of the switchgear. Arrangements for double locking or other special procedures shall be discussed with Alliant Energy.

## 1002. UNDERGROUND PRIMARY SERVICE- CONTINUED

### UNDERGROUND PRIMARY SERVICE SWITCHGEAR 1-LINE

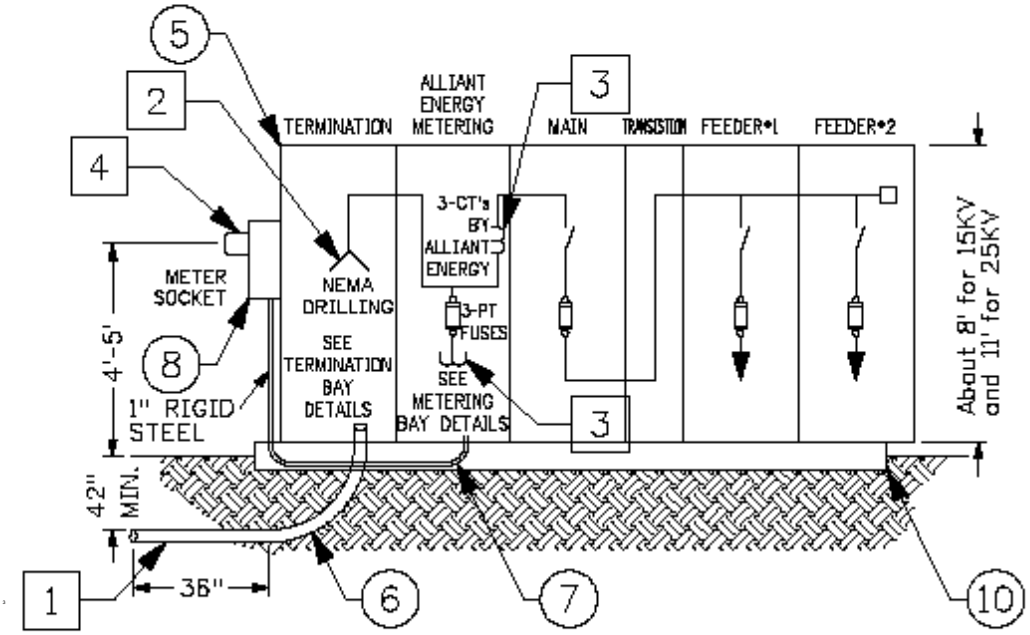


Sequence in METER-SWITCH-FUSE. For less than 6 switches or feeders, a main switch/fuse may not have to be installed. A main switch/fuse shall for customers with generators feeding back into one of the feeders for isolation with Allinant Energy.

### TERMINATION BAY

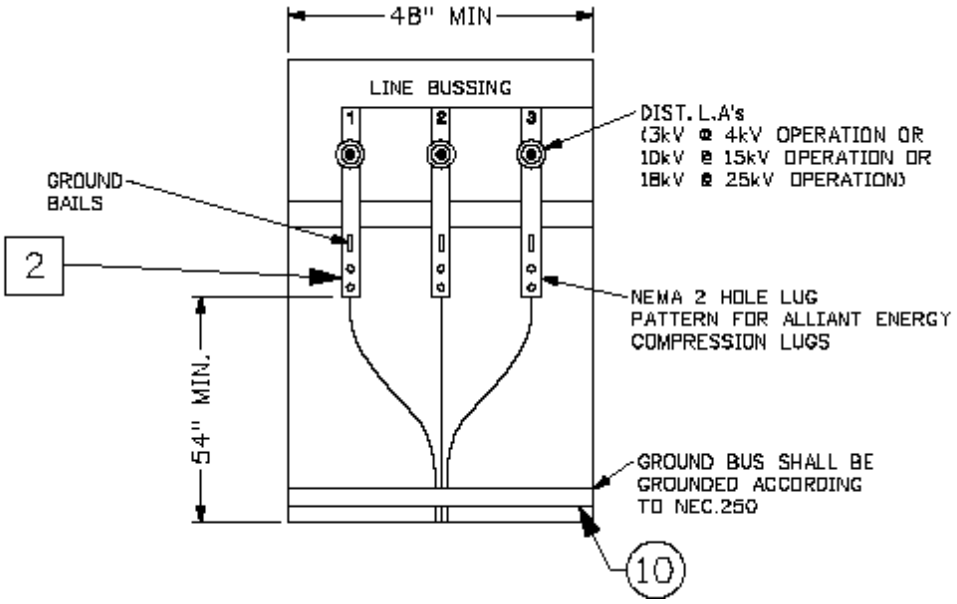

## 15 kV METERING BAY

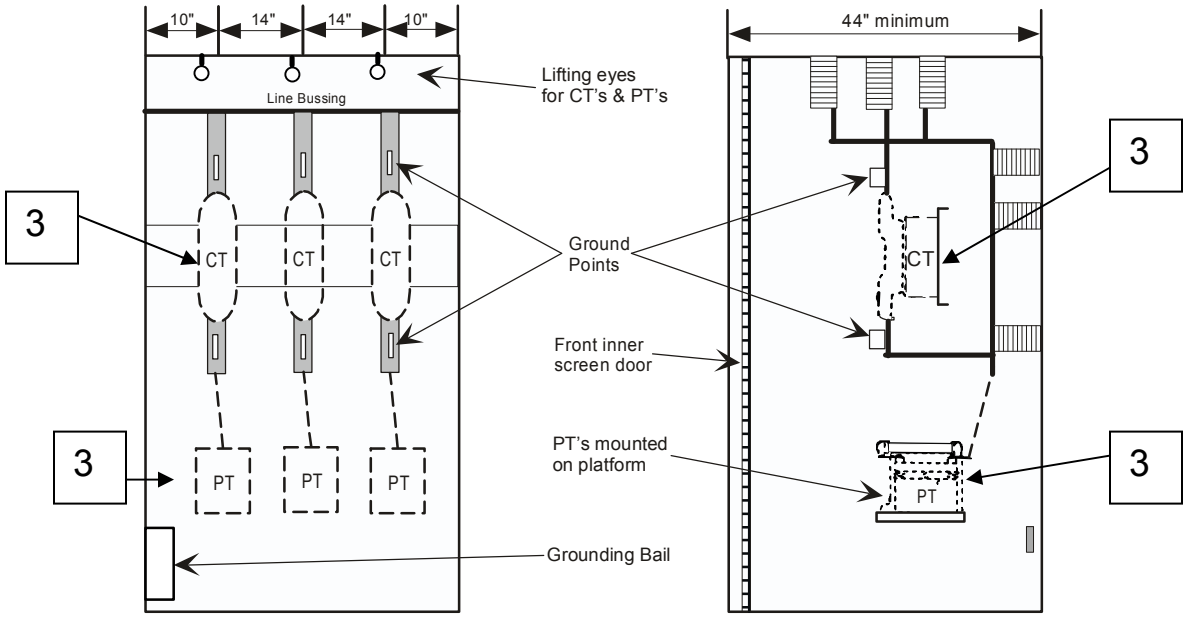


## 25 kV METERING BAY

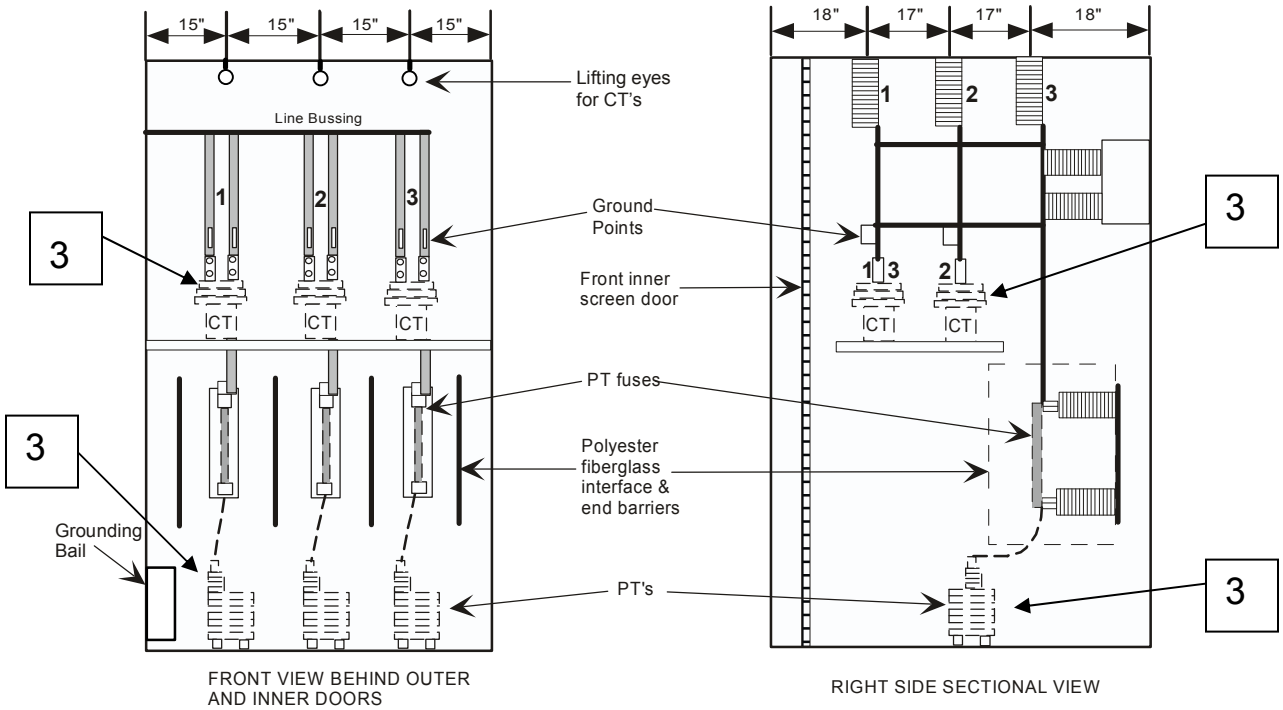

## 1003. UNDERGROUND PRIMARY SERVICE WITH OVERHEAD METERING

○ **Customer furnishes, installs and maintains**

6. Pole
7. Guy and anchor
8. Underground primary cable, terminators and arresters
9. Disconnect switches
10. Grounding per NEC 250
11. Meter socket
12. Metering conduit
13. Switchgear
14. Switchgear pad
15. U-guard.
16. Arresters

☐ **Alliant Energy furnishes, installs and maintains**

1. Overhead primary conductors
2. Dead-end shoes and insulators
3. PT's and CT's with mounting bracket
4. Socket type meter
5. Disconnects and arresters

**NOTES:**

**1.** Switchgear shall have a main disconnect that is gang operated, lockable with a visual open, be capable of carrying full load requirements and withstanding faults of 10,000 amps. (RMS symmetrical)

**2.** Switchgear shall be located 10 feet from base of pole for safety when climbing metering pole and minimize the length of unprotected primary cable.

**3.** Pole shall be of adequate height to allow for ground clearance in accordance with all codes for primary conductors including the neutral. The pole shall be of adequate class to provide strength to support conductors with ice and wind loading. Further information on this can be obtained from Alliant Energy.

**4.** The customer shall provide adequate climbing space on the main service entrance structure as specified in the National Electric Safety Code (NESC).

**5.** The customer shall supply a vertical spacing of a minimum of 96" for the installation of Alliant Energy's metering bracket with CT's and PT's.

**6.** Disconnects on the pole shall have the ability to be opened under load with the use of a load-buster tool.

**7.** Metering conduit – 1 inch rigid steel conduit with weatherhead. Maximum allowable conduit run is 50 feet, with a total of 180 degrees in bends. Runs longer than 50 feet or runs with more than 180 degrees in bends will require approval by Alliant Energy. Consult Metering Dept. for appropriate PT's and CT's and ordering procedure. The meter cable will be furnished and installed by Alliant Energy.

## 1003. UNDERGROUND PRIMARY SERVICE WITH OVERHEAD METERING - CONTINUED

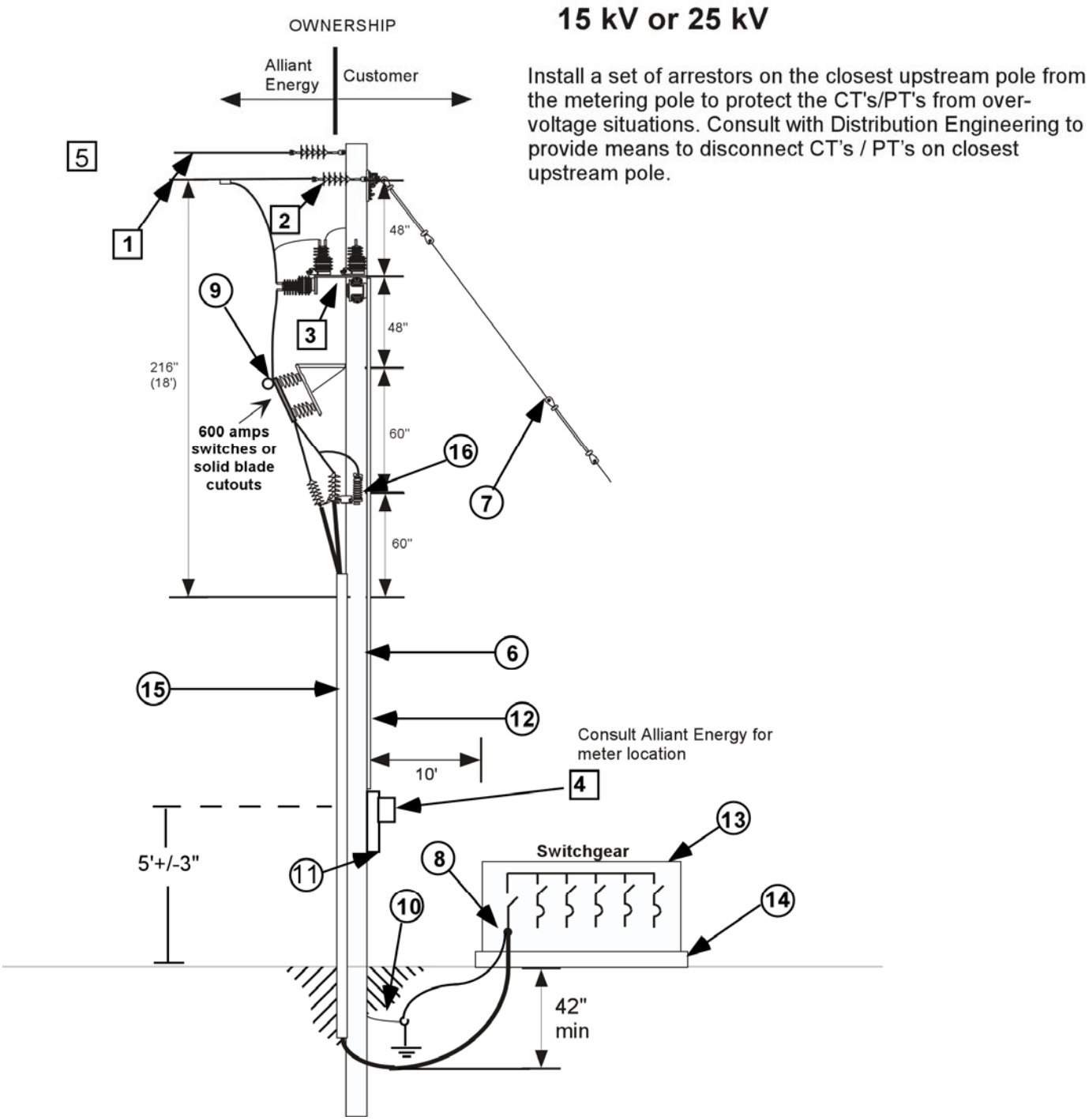

## 1004 UNDERGROUND PRIMARY SERVICE TO METERING ENCLOSURE

○ **The Customer furnishes, installs and maintains:**

5. Primary metering enclosure (see Note 5 below)
6. Box pad
7. Meter socket
8. Underground primary cable with terminations and arresters
9. Switchgear
10. Switchgear pad
11. Arresters
12. Ground rod and grounding conductor

☐ **Alliant Energy furnishes, installs and maintains:**

1. Underground primary service
2. PT's and CT's
3. Socket type meter
4. Disconnect and arresters

**NOTES:**

1. Box pad shall provide adequate space for training of primary cable.
2. Switchgear shall be located within 10 feet of metering enclosure to minimize the length of unprotected customer primary cable.
3. Switchgear shall have a main disconnect that is gang operated, operable by Alliant Energy and customer, lockable visual open, be capable of carrying full load requirements and withstanding faults of 10,000 amps (RMS symmetrical).
4. Branch circuit switches operated at primary voltage should meet operating criteria similar to the main disconnect.
5. Consult Alliant Energy Distribution Engineer for appropriate dead-front metering enclosure as listed in the equipment section.
6. Consult Metering Dept. for appropriate PT's and CT's, ordering procedure and shipment details to manufacturer for installation.

## 1004. UNDERGROUND PRIMARY SERVICE TO METERING ENCLOSURE, CONTINUED.

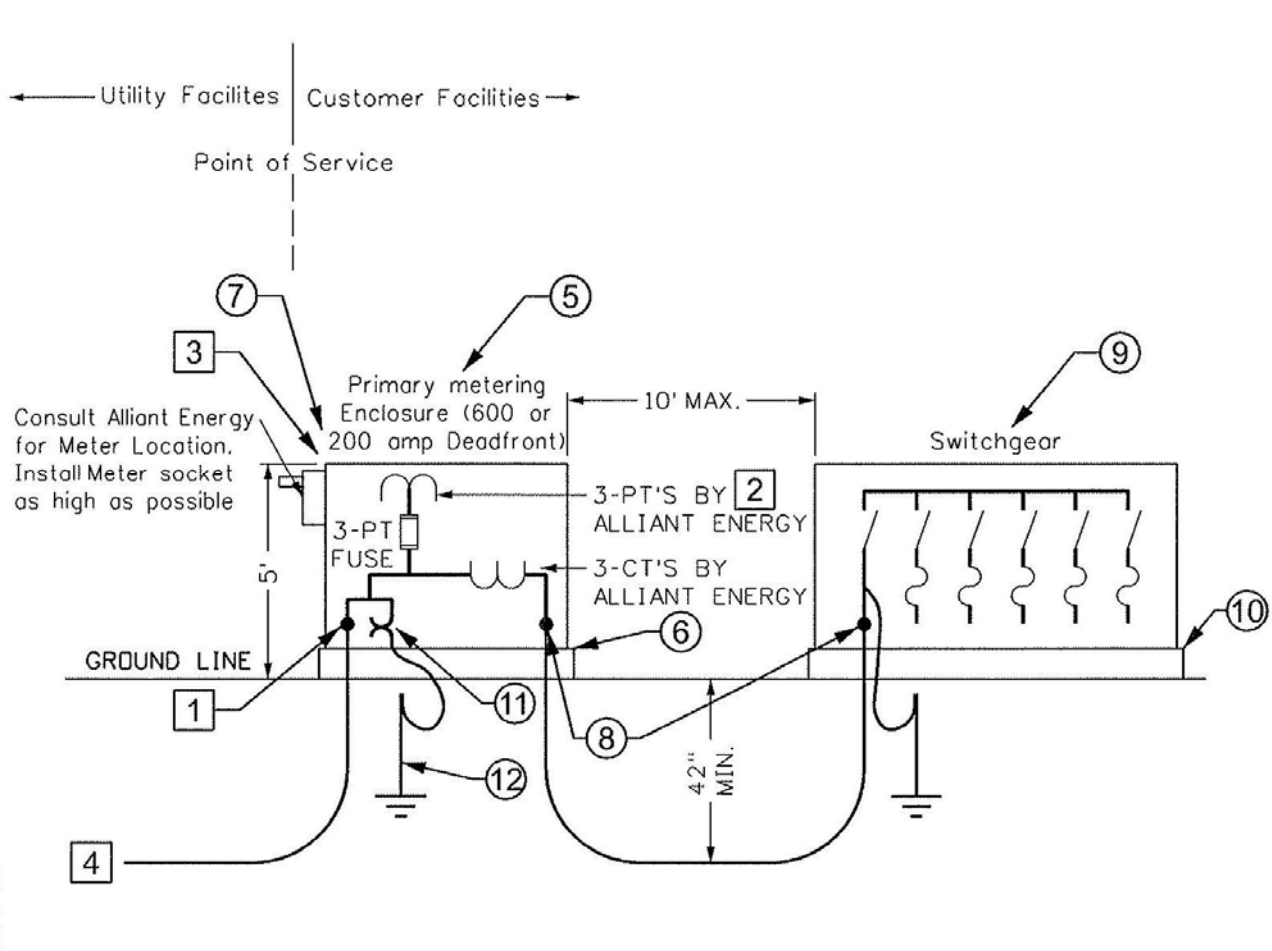


Consult with Distribution Engineering to provide means to disconnect CT's/PT's in the enclosure by closest upstream device

## 1005. GENERAL GROUNDING

**A.** In accordance with the **National Electrical Code** (NEC), a permanent and effective ground shall always be provided for all service entrance equipment. The neutral conductor shall also be grounded.

**B.** The grounding of electric installations is essential for the safety of those using the electric service, personnel maintaining the service, and is a safeguard for the Customer's equipment.

**C.** Intersystem Bonding is required by NEC 250.94. See page 229 for details.

## 1006. GROUNDING ELECTRODE SYSTEM

Grounding Electrodes NEC 250.52:

1. Metal Underground Water Pipe. – NEC250.52 (A)(1)
2. Metal Frame of a Building or Structure - NEC250.52 (A)(2)
3. Concrete Encased Electrode (Ufer) - NEC250.52 (A)(3)
4. Ground Ring - NEC250.52 (A) (4)
5. Rod and Pipe Electrodes - NEC250.52 (A)(5)
6. Plate Electrodes. - NEC250.52 (A)(6)

**A.** If available on the premises at each building or structure served, each item in NEC 250.52 (A) 1-6, shall be bonded together to form the grounding electrode system.

**B.** The grounding electrode conductor (GEC)

1) The grounding electrode conductor shall not be run through meter sockets, Instrument Transformer Cabinets, or the utility portion of a metering pedestal.
2) The grounding electrode conductor may be terminated in one of the following.
    a) In the service disconnect(s).
    b) In the metering equipment containing a service disconnect
    c) In the termination compartment of multiple metering installations.

**C.** Metal underground gas piping systems on the line side of the gas meter shall not be used as a grounding electrode or bonded to the grounding electrode system.

**D.** If two ground rods are installed (NEC 250.56), both ground rods shall be installed to left or right of meter socket but not in front. The grounding electrode conductor shall not pass in front of meter socket or pedestal.

## 1007. BONDING SERVICE ENTRANCE AND METERING EQUIPMENT

**A.** The electrical contractor is responsible for all bonding connections.

**B.** The termination cabinet, the CT cabinet and the meter socket enclosure shall be bonded to:

**1.** The system neutral when they are located on the line side of or at the main disconnect.

**2.** The equipment grounding conductor, when all of the following apply:

**a.** They are installed the load side of the main disconnect.

**b.** No service ground-fault protection is installed.

**c.** They are located immediately adjacent to the main disconnect.

**C.** Bonding shall be provided where necessary to ensure electrical continuity and the capacity to safely conduct any fault current likely to be imposed.

**D.** Intersystem bonding – CATV, Cable Dish systems and Telephone Companies shall bond to the grounding electrode system, if available. If the grounding electrode system is not readily available, bonding shall be done at the ground terminal bar in the main service entrance equipment. NEC 250.94 (2) or (3) only. This intersystem bonding shall not be done in or on the metering equipment. Wisconsin is the jurisdiction of the PSC. (PSC 114.099).

**E.** Meter disconnect switches nominally rated not in excess of 600 volts shall have a short circuit rating equal to or greater than the available short circuit current. These devices shall also be grounded and bonded according to parts V & VII of Article 250.

△ **1008. BONDING CONDUCTOR SIZING**

Equipment bonding conductors on the supply side of service shall be sized according to NEC 250.66.

△

## TABLE 1008 (NEC 250.66)

| Metering Cabinet Rating, Amps | Svc Entrance Conductor Size (75°C Alum.) | 2011 NEC Table 310.15(B)(16) 90°C Ampacity (per run) | Number of Runs | Total Ampacity | Minimum Equipment Bonding Conductor Size or Equivalent Area for Parallel Conductors (Aluminum, AWG/kcmil) |
|---|---|---|---|---|---|
| 400 | 250 | 205 | 2 | 410 | #2 |
| | 350 | 230 | 2 | 460 | 1/0 |
| 600 | 250 | 205 | 3 | 615 | 1/0 |
| | 350 | 230 | 3 | 690 | 1/0 |
| 800 | 250 | 205 | 4 | 820 | 2/0 |
| | 350 | 250 | 4 | 1000 | 4/0 |
| 1200 | 350 | 250 | 5 | 1250 | 250 |
| | 500 | 310 | 4 | 1240 | 250 |
| | 600 | 340 | 4 | 1360 | 300 |
| 1600 | 350 | 250 | 7 | 1750 | 350 |
| | 500 | 310 | 6 | 1860 | 500 |
| | 600 | 340 | 5 | 1700 | 500 |
| 2000 | 350 | 250 | 8 | 2000 | 350 |
| | 500 | 310 | 7 | 2170 | 500 |
| | 600 | 340 | 6 | 2040 | 500 |
| 2500 | 750 | 385 | 7 | 2695 | 750 |
| | 1000 | 445 | 6 | 2670 | 750 |
| 3000 | 750 | 385 | 8 | 3080 | 750 |
| | 1000 | 445 | 7 | 3115 | 1000 |

| Metering Cabinet Rating | Service Entrance Conductor Size (75C Copper) | 2011 NEC Table 310.15(B)(16) 75°C Ampacity (per run) | Number of Runs | Total Ampacity | Minimum Equipment Bonding Conductor Size or Equivalent Area for Parallel Conductors (Copper, AWG/kcmil) |
|---|---|---|---|---|---|
| 400 | 3/0 | 200 | 2 | 400 | #4 |
| | 4/0 | 230 | 2 | 460 | #2 |
| | 600 | 420 | 1 | 420 | #2 |
| 600 | 3/0 | 225 | 3 | 675 | #2 |
| | 4/0 | 260 | 3 | 780 | #1 |
| | 300 | 320 | 2 | 640 | #1 |
| 800 | 350 | 310 | 3 | 930 | 1/0 |
| | 500 | 380 | 3 | 1140 | 2/0 |
| 1200 | 350 | 350 | 4 | 1400 | 4/0 |
| | 500 | 430 | 3 | 1290 | 4/0 |
| | 750 | 475 | 3 | 1425 | 250 |
| 1600 | 350 | 310 | 6 | 1860 | 250 |
| | 500 | 380 | 5 | 1900 | 250 |
| | 600 | 420 | 4 | 1680 | 300 |
| | 750 | 475 | 4 | 1900 | 300 |
| 2000 | 350 | 310 | 7 | 2170 | 300 |
| | 500 | 380 | 6 | 2280 | 350 |
| | 600 | 420 | 5 | 2100 | 400 |
| | 750 | 475 | 5 | 2375 | 400 |
| 2500 | 500 | 380 | 7 | 2660 | 400 |
| | 600 | 420 | 6 | 2520 | 500 |
| | 750 | 475 | 6 | 2850 | 500 |
| 3000 | 500 | 380 | 8 | 3040 | 500 |
| | 600 | 420 | 8 | 3360 | 600 |
| | 750 | 475 | 7 | 3325 | 600 |